RICOH UNIVERSITY
Learning ◆ Knowledge ◆ Performance

LDD280 (C262)/LDD250 (C265)
SERVICE MANUAL

002648MIU (rev. 05/31/06)

Gestetner LANIER RICOH savin

RICOH
Learning ◆ Knowledge ◆ Performance
UNIVERSITY

SERVICE MANUAL

C262/C265

Gestetner
LANIER
RICOH
SAVIN

RICOH UNIVERSITY
Learning ◆ Knowledge ◆ Performance

C262/C265
SERVICE MANUAL

002648MIU

Gestetner LANIER RICOH SAVIN

It is the reader's responsibility when discussing the information contained within this document to maintain a level of confidentiality that is in the best interest of Ricoh Corporation and its member companies.

NO PART OF THIS DOCUMENT MAY BE REPRODUCED IN ANY FASHION AND DISTRIBUTED WITHOUT THE PRIOR PERMISSION OF RICOH CORPORATION.

All product names, domain names or product illustrations, including desktop images, used in this document are trademarks, registered trademarks or the property of their respective companies.
They are used throughout this book in an informational or editorial fashion only and for the benefit of such companies. No such use, or the use of any trade name, or web site is intended to convey endorsement or other affiliation with Ricoh products.

© 2006 RICOH Corporation. All rights reserved.

WARNING

The Service Manual contains information regarding service techniques, procedures, processes and spare parts of office equipment distributed by Ricoh Corporation. Users of this manual should be either service trained or certified by successfully completing a Ricoh Technical Training Program.

Untrained and uncertified users utilizing information contained in this service manual to repair or modify Ricoh equipment risk personal injury, damage to property or loss of warranty protection.

Ricoh Corporation

LEGEND

PRODUCT CODE	COMPANY			
	GESTETNER	LANIER	RICOH	SAVIN
C262	CP6364	LDD280	HQ9000	3590DNP
C265	CP6334	LDD250	HQ7000	3580DNP

DOCUMENTATION HISTORY

REV. NO.	DATE	COMMENTS
*	04/2006	Original Printing

C262/C265

TABLE OF CONTENTS

INSTALLATION

1. INSTALLATION 1-1

1.1 INSTALLATION REQUIREMENTS 1-1
1.1.1 OPTIMUM ENVIRONMENTAL CONDITION 1-1
1.1.2 ENVIRONMENTS TO AVOID 1-1
1.1.3 POWER CONNECTION 1-1
1.1.4 ACCESS TO THE MACHINE 1-2
1.1.5 POWER SOCKETS FOR PERIPHERALS 1-3
1.2 INSTALLATION PROCEDURE 1-4
1.2.1 MAIN BODY 1-4
Accessory Check 1-4
Installation Procedure 1-5
Date/Time Setting 1-17
SP Codes Setting 1-17
Changing the operation panel language 1-17
1.2.2 PLATEN COVER (OPTION) 1-18
Accessory Check 1-18
Installation Procedure 1-18
1.2.3 ADF (OPTION) 1-19
Accessory Check 1-19
Installation Procedure 1-20
ADF stabilizer installation 1-23
1.2.4 ADDITIONAL DRUMS (OPTION) 1-24
1.2.5 EXTENSION HDD TYPE 1 (OPTION) 1-28
Accessory Check 1-28
Installation Procedure 1-28
1.2.6 POSTSCRIPT3 BOARD TYPE 2 (OPTION) 1-29
Accessory Check 1-29
Inserting DIMMs 1-29
Installation Procedure 1-30
1.2.7 IEEE 802.11B I/F UNIT TYPE 1 (OPTION) 1-31
Accessory Check 1-31
Installation Procedure 1-31
1.2.8 IEEE 1284 PARALLEL BOARD TYPE 1 (OPTION) 1-32
Accessory Check 1-32
Installation Procedure 1-32
1.2.9 MEMORY UNIT TYPE C (128MB/256MB) (OPTION) 1-33
Accessory Check 1-33
Installation Procedure 1-33
1.2.10 CONFIGURATION PAGE (EXAMPLE PRINTOUT) 1-34

PREVENTIVE MAINTENANCE

2. PREVENTIVE MAINTENANCE 2-1
2.1 MAINTENANCE TABLE 2-1

REPLACEMENT AND ADJUSTMENT

3. REPLACEMENT AND ADJUSTMENT 3-1
3.1 GENERAL CAUTION 3-1
3.2 COVERS 3-1
3.2.1 FRONT COVER, INNER COVER, KNOB COVER 3-1
3.2.2 LEFT COVER, RIGHT FRONT AND RIGHT REAR COVERS, REAR COVER 3-2
3.2.3 OPERATION PANEL, LEFT SCANNER COVER, REAR UPPER COVER, RIGHT SCANNER COVER, LOWER PANEL COVER 3-3
3.2.4 EXPOSURE GLASS, SCALES 3-4
3.3 SCANNER UNIT 3-5
3.3.1 SCANNER FRAME, SCANNER HP SENSOR, PLATEN COVER SENSOR, EXPOSURE LAMP 3-5
3.3.2 LENS COVER 3-6
3.3.3 ORIGINAL SIZE SENSORS 3-7
3.3.4 LAMP STABILIZER, SBU, SCANNER DRIVE MOTOR 3-8
3.3.5 SCANNER WIRES 3-10
Installation 3-10
3.3.6 SBU (SENSOR BOARD UNIT) CALIBRATION 3-12
3.4 COPY IMAGE ADJUSTMENT 3-13
3.4.1 LEADING EDGE REGISTRATION ADJUSTMENT 3-13
3.4.2 SIDE-TO-SIDE REGISTRATION ADJUSTMENT 3-14
3.4.3 VERTICAL MAGNIFICATION ADJUSTMENT 3-15
3.5 BOARDS 3-16
3.5.1 ACU AND ECU, PSU OPENING PROCEDURE 3-16
3.5.2 ACU, ECU, I/O 3-17
3.5.3 PSU 3-19
3.5.4 DOUBLE FEED DETECTOR BOARD 3-20
3.5.5 ECU AND I/O REPLACEMENT, NVRAMS 3-21
3.6 MASTER EJECT SECTION 3-22
3.6.1 MASTER EJECT BOX 3-22
3.6.2 MASTER EJECT ROLLER UNIT, MASTER EJECT SENSOR 3-23
3.6.3 MASTER EJECT DRIVE UNIT, SENSORS AND MOTORS 3-24
3.6.4 MASTER EJECT BOX LOCK SOLENOID 3-25
3.6.5 MASTER EJECT SENSOR ADJUSTMENT 3-26
3.6.6 REASSEMBLING THE MASTER PICK-UP ROLLER DRIVE GEARS 3-27
3.7 MASTER FEED SECTION 3-28
3.7.1 MASTER MAKING UNIT 3-28
3.7.2 MASTER SET ROLLER, PLATEN ROLLER, UPPER TENSION ROLLER 3-30

3.7.3 THERMAL HEAD....3-32
3.7.4 DUCT ENTRANCE SOLENOID....3-33
3.7.5 CUTTER UNIT, MASTER FEED CONTROL MOTOR, CLAMP TENSION ROLLER, UPPER MASTER FEED CONTROL ROLLER....3-34
3.7.6 PLATEN RELEASE SENSOR, PLATEN RELEASE MOTOR....3-37
3.7.7 MASTER AMOUNT SENSOR....3-39
3.7.8 MASTER DUCT SENSOR, MASTER SUCTION FANS, MASTER FEED MOTOR....3-40
3.7.9 MASTER SET SENSOR, MASTER EDGE SENSOR....3-42
3.7.10 FLAT CABLE....3-43
3.7.11 MASTER END SENSOR....3-43
3.7.12 MASTER BUFFER FANS....3-44
3.7.13 UNIT LOCK SOLENOID, 2ND DRUM MASTER SENSOR....3-44
3.7.14 PLATEN RELEASE CAM ADJUSTMENT....3-46
3.7.15 THERMAL HEAD VOLTAGE ADJUSTMENT....3-47
3.7.16 MASTER END SENSOR ADJUSTMENT....3-48
3.7.17 MASTER EDGE SENSOR ADJUSTMENT....3-49
3.7.18 MASTER SET SENSOR ADJUSTMENT....3-50
3.7.19 THERMAL HEAD ALIGNMENT ADJUSTMENT....3-52
3.7.20 MASTER MAKING UNIT PARALLEL ADJUSTMENT....3-53
3.7.21 MASTER EDGE TRIMMING PROCEDURE....3-55
3.7.22 MASTER FEED MYLAR POSITIONING....3-57
3.8 DRUM SECTION....3-58
3.8.1 DRUM UNIT....3-58
3.8.2 DRUM CLOTH SCREEN....3-58
3.8.3 DRUM MASTER CLAMPER, METAL SCREEN....3-61
3.8.4 MOTORS AND SENSORS IN THE DRUM....3-64
3.8.5 INK ID DETECTION/INK FLOW SENSOR CONNECTOR....3-67
3.8.6 INK ROLLER GAP ADJUSTMENT....3-68
3.8.7 INK DETECTION ADJUSTMENT....3-70
3.8.8 DRUM POSITION ADJUSTMENT....3-72
3.8.9 1ST DRUM MASTER SENSOR ADJUSTMENT....3-74
3.8.10 2ND DRUM MASTER SENSOR ADJUSTMENT....3-76
3.9 PAPER FEED SECTION....3-78
3.9.1 PAPER TABLE UNIT, PAPER FEED ASSEMBLY....3-78
3.9.2 PICK-UP ROLLER, PAPER FEED ROLLER....3-80
3.9.3 PAPER WIDTH DETECTION BOARD....3-81
3.9.4 PAPER HEIGHT SENSOR....3-82
3.9.5 FEED PRESSURE MOTOR, FEED PRESSURE DETECTION BOARD....3-83
3.9.6 REGISTRATION PRESSURE MOTOR, REGISTRATION ROLLER PRESS SENSOR, REGISTRATION ROLLER RELEASE SENSOR....3-84
3.9.7 PAPER REGISTRATION SENSOR, PAPER FEED TIMING SENSOR....3-85
3.9.8 UPPER REGISTRATION ROLLER....3-89
3.9.9 FRICTION PADS....3-90
3.9.10 SEPARATION PRESSURE DETECTION BOARD, FRICTION PAD SHIFT MOTOR....3-91
3.9.11 SEPARATION PRESSURE MOTOR, FRICTION PAD

POSITION SENSORS 1, 2 3-92
3.9.12 LOWER REGISTRATION ROLLER 3-93
3.9.13 REGISTRATION ROLLER LIFTING CAM POSITION ADJUSTMENT 3-94
3.9.14 DOUBLE FEED SENSOR ADJUSTMENT 3-95
3.9.15 TIMING BELT TENSION ADJUSTMENT FOR THE PAPER FEED MOTOR 3-96
3.9.16 TIMING BELT TENSION ADJUSTMENT FOR THE REGISTRATION MOTOR 3-97
3.9.17 PAPER FEED AND SEPARATION PRESSURE ADJUSTMENT 3-98
Paper feed pressure adjustment 3-98
Paper separation pressure adjustment 3-98
3.9.18 PAPER FEED LENGTH ADJUSTMENT 3-99
Paper Feed Motor Stop Timing Adjustment 3-99
Paper Clamping Timing Adjustment 3-100
3.10 PRINTING SECTION 3-101
3.10.1 PRESSURE CYLINDER, PAPER CLAMPER 3-101
Removal procedure 3-101
Reinstallation procedure 3-104
3.10.2 FEED ENCODER, FEED START SENSOR, FEED ENCODER HARNESS, FEED ENCODER CLEANING BRUSH 3-107
3.10.3 1ST DRUM MASTER SENSOR 3-110
3.10.4 1ST DRUM MASTER SENSOR GUIDE ADJUSTMENT 3-111
3.10.5 PRINTING PRESSURE HP SENSOR, PRINTING PRESSURE POSITION SENSOR, PRESSURE CAM SHIFT MOTOR 3-112
3.10.6 PRINTING PRESSURE ADJUSTMENT 3-113
3.10.7 PRINTING PRESSURE RELEASE ARM GAP ADJUSTMENT 3-113
3.11 MAIN DRIVE AND IMAGE UP/DOWN SHIFTING DRIVE SECTION 3-114
3.11.1 MAIN MOTOR AND TORQUE LIMITER 3-114
3.11.2 MAIN DRIVE MECHANISM (MAIN DRIVE TIMING BELT) 3-122
Disassembly Procedure 3-122
Reassembly Procedure 3-127
Copy Image Check Procedure after Main Drive and Image Up/Down Shifting Drive Section Re-assembly 3-138
3.11.3 SCISSORS GEAR 3-139
3.11.4 PRESSURE CYLINDER ROTATION KNOB ADJUSTMENT 3-143
3.11.5 SCISSORS GEAR POSITION ADJUSEMENT 3-144
3.11.6 IMAGE UP/DOWN SHIFT WORM-GEAR POSITION ADJUSEMENT 3-144
3.11.7 IMAGE UP/DOWN SHIFT DRIVE UNIT POSITION ADJUSEMENT 3-145
3.11.8 IMAGE SHIFT GEAR PRESSURE ADJUSEMENT 3-146
3.12 PAPER DELIVERY SECTION 3-148
3.12.1 PAPER EXIT PAWL 3-148
3.12.2 PAPER DELIVERY UNIT, AIR KNIFE FAN UNIT, PAPER PICK-OFF PLATE 3-149
3.12.3 JOB SEPARATOR UNIT, PRINTING PRESSURE CAM SHIFT UNIT 3-151
3.12.4 PAPER EXIT SENSOR, TRANSPORT VACUUM FAN,

PAPER EXIT SENSOR 3-152
3.12.5 GAP ADJUSTMENT BETWEEN PAPER PICK-OFF PLATE AND PRESSURE CYLINDER 3-153
3.12.6 PAPER EXIT PAWL DRIVE TIMING ADJUSTMENT 3-155
3.12.7 GAP ADJUSTMENT BETWEEN EXIT PAWL AND DRUM 3-156
3.12.8 CHOCKS 3-157

TROUBLESHOOTING

4. TROUBLESHOOTING 4-1
4.1 SERVICE CALL CODES 4-1
4.2 CLASSIFICATION LIST 4-1
4.3 SERVICE CALL CODE TABLE 4-2
4.4 ELECTRICAL COMPONENT DEFECTS 4-11
4.4.1 SCANNER 4-11
4.4.2 ADF 4-11
4.4.3 MASTER MAKING UNIT 4-13
4.4.4 DRUM 4-13
4.4.5 MASTER EJECT 4-16
4.4.6 PAPER FEED 4-17
4.4.7 PRINTING AND PRESSURE CYLINDER 4-18
4.4.8 PAPER EJECT 4-19
4.4.9 PAPER SEPARATION 4-20
4.4.10 FUSES ON BOARDS 4-20
4.5 DIP SW, LED, VR, TP, AND FUSE TABLES 4-21
4.5.1 TEST POINTS 4-21
Ink Detection Board 4-21
4.5.2 DIP SWITCHES 4-21
Ink Detection Board 4-21
ACU 4-21
4.5.3 POTENTIOMETERS 4-22
I/O Board 4-22
Power Supply Board 4-22
Ink Detection Board 4-22
4.5.4 LED'S 4-23
MPU 4-23
I/O Board 4-23
ACU 4-23
Operation Panel 4-23
4.5.5 FUSES 4-23
Power Supply Unit 4-23
Main Motor Drive Board 4-24
I/O Board 4-24

SERVICE TABLES

5. SERVICE TABLES 5-1

5.1 SERVICE REMARKS 5-1
5.1.1 SCANNER SECTION 5-1
1. Xenon Lamp 5-1
2. Scanner Wire Installation 5-1
3. Sensor Board Unit (SBU) Calibration 5-1
5.1.2 MASTER EJECT SECTION 5-1
1. Master Pick-up Roller Drive Gear and Master Clamper Drive Arm Positions 5-1
5.1.3 MASTER FEED SECTION 5-1
1. Thermal Head 1 5-1
2. Thermal Head 2 5-1
3. Master Vacuum Fan Position 5-1
4. Master Feed Mylar Positions 5-2
5.1.4 PAPER FEED SECTION 5-2
1. Paper Pick-up Roller and Paper Feed Roller 1 5-2
2. Paper Pick-up Roller and Paper Feed Roller 2 5-2
5.1.5 DRUM AND DRUM DRIVE SECTION 5-2
1. Doctor Roller 5-2
2. Drum Master Clamper 5-2
3. Ink Roller Unit 5-2
5.1.6 MAIN DRIVE SECTION 5-3
1. Main Drive Adjustment 5-3
5.1.7 ELECTRICAL COMPONENTS 5-3
1. ECU and I/O Boards 5-3
2. ACU, ECU, and Power Supply Unit 5-3
3. Power Supply Unit 5-3
4. Program Update 5-3
5. Sensor Adjustments 5-3
5.2 SPECIAL TOOLS 5-4
5.3 TOUCH PANEL POSITION ADJUSTMENT 5-5
5.4 SERVICE PROGRAM MODE 5-6
5.4.1 ENABLING AND DISABLING SERVICE PROGRAM MODE 5-6
Entering SP Mode 5-6
Exiting SP Mode 5-6
5.4.2 TYPES OF SP MODES 5-7
SP Mode Button Summary 5-8
Selecting the Program Number 5-9
Exiting Service Mode 5-9
5.4.3 SERVICE PROGRAM TABLE 5-10
1. Data Logging 5-11
2. Basic Settings 5-18
3. System Settings 5-26
4. Input Test Mode 5-28
5. Output Test Mode 5-31
6. System Adjustment 5-34
7. Memory Data Clear 5-49
8. System Test 5-50
5.5 FIRMWARE UPDATE 5-52
5.5.1 OVERVIEW 5-52

5.5.2 PREPARING TO DOWNLOAD FIRMWARE 5-53
5.5.3 DOWNLOADING THE FIRMWARE TO THE MACHINE 5-54
5.5.4 ERRORS DURING FIRMWARE UPDATE 5-59
5.6 SP MODE SETTINGS AFTER REPLACING AN NVRAM 5-60
5.6.1 NVRAM FOR THE ACU 5-60
5.6.2 NVRAM FOR THE ECU 5-60

DETAILED SECTION DESCRIPTIONS

6. DETAILED SECTION DESCRIPTIONS 6-1
6.1 MECHANISM OVERVIEW 6-1
6.1.1 MAJOR PARTS 6-1
6.1.2 ELECTRICAL COMPONENT LAYOUT 6-2
Printed circuit board layout 6-2
Scanner Section 6-2
Paper Feed Section 6-3
Drum Unit 6-3
Master Eject, Pressure Cylinder, and Other Sections 6-4
Paper Delivery Section 6-4
Master Making Unit 6-5
6.1.3 TABLE OF ELECTRICAL COMPONENTS 6-6
Boards 6-6
Motors 6-6
Switches 6-7
Sensors 6-8
Solenoids 6-10
Others 6-10
6.1.4 DRIVE LAYOUT 6-11
Overview 6-11
Main Drive 6-12
6.2 SCANNER AND OPTICS 6-13
6.2.1 OVERVIEW 6-13
6.2.2 SCANNER DRIVE 6-13
6.2.3 ORIGINAL SIZE DETECTION IN PLATEN MODE 6-14
6.2.4 AUTO BACKGROUND CORRECTION 6-16
6.3 IMAGE PROCESSING 6-17
6.3.1 OVERVIEW 6-17
6.3.2 AUTO SHADING 6-18
6.3.3 FILTERING 6-19
Types of Filters 6-19
Filters for each Original Type 6-19
Features of the filters 6-19
6.3.4 MAIN SCAN MAGNIFICATION/REDUCTION 6-19
6.3.5 CENTERING 6-20
6.3.6 BINARY PROCESSING 6-20
6.3.7 ERASE SHADOW 6-20
6.3.8 MEMORY FUNCTION 6-21
6.4 THERMAL HEAD 6-22

6.4.1 SPECIFICATIONS....6-22
Thermal Head Control....6-22
Thermal Head Protection....6-22
REMARKS FOR HANDLING THE THERMAL HEAD....6-23
6.5 MASTER EJECT....6-24
6.5.1 OVERVIEW....6-24
6.5.2 MASTER EJECT MECHANISM....6-25
Overview....6-25
Drum Lock Mechanism....6-26
Master Pick-up Roller Drive and Master Clamper Open....6-27
Master Eject and Transportation....6-28
Master Eject Roller Unit Drive....6-28
Master Eject Roller Unit Slide-out Mechanism....6-29
6.5.3 MASTER EJECT BOX MECHANISM....6-30
6.5.4 MASTER EJECT BOX LOCK MECHANISM....6-32
6.5.5 PRESSURE PLATE DRIVE MECHANISM....6-33
Overview....6-33
Drive....6-33
Homing Operation....6-34
Shift to the Master Eject Position....6-35
Ejected Master Compression....6-36
Master Box Full Detection Mechanism....6-38
Pressure Plate Operation Timing Charts....6-39
6.6 MASTER FEED....6-41
6.6.1 OVERVIEW....6-41
6.6.2 MASTER SET MECHANISM....6-42
Master Roll Set....6-42
Master Feed and Stop Control (Edge Detection)....6-42
Master End Detection....6-44
Master Amount Detection....6-45
6.6.3 MASTER MAKING AND FEED MECHANISM....6-46
Master Feed Mechanism....6-46
Platen Roller Pressure Release....6-47
Master Buffer Mechanism....6-48
6.6.4 WRAPPING THE MASTER AROUND THE DRUM....6-49
Drum Lock and Master Clamper Open....6-49
Master Feed Control Roller Mechanism....6-50
Master Clamping and Wrapping around the Drum....6-51
Cutter Mechanism....6-52
Master Buffer Duct Entrance Control....6-53
Misfed Master Detection....6-54
Opening the Door for Misfed Master Removal....6-54
6.6.5 MASTER MAKING UNIT SET MECHANISM....6-55
Master Making Unit Slide-out Mechanism....6-55
Master Making Unit Lock Mechanism....6-55
6.6.6 MASTER JAM, CUTTER ERROR, AND CLAMP ERROR DETECTION....6-56
Master set error and misfeed....6-56
Master cut error....6-57

Master clamp error....6-57
6.7 DRUM....6-58
6.7.1 OVERVIEW....6-58
6.7.2 INK SUPPLY AND KNEADING MECHANISM....6-59
Ink Cartridge Installation....6-59
Ink Supply Mechanism....6-59
Ink Pump Operation Monitoring....6-59
Ink Detection Board....6-60
Drum Type Detection....6-61
Color Drum ID Detection....6-62
Automatic Ink Supply for a New Drum....6-64
Ink Kneading Mechanism....6-65
Drum Idling Mechanism....6-66
6.7.3 DRUM SHIFT MECHANISM FOR IMAGE SIDE-TO-SIDE SHIFT....6-69
6.7.4 DRUM SET MECHANISM....6-70
Upper Handle and Lock....6-70
Front Lock Lever....6-70
Drum Rotation Lock Mechanism....6-71
6.7.5 DRUM DRIVE MECHANISM....6-72
6.7.6 MASTER DETECTION....6-74
6.7.7 DRUM HOME POSITION DETECTION....6-75
6.8 PAPER FEED....6-76
6.8.1 OVERVIEW....6-76
Feed and Separation....6-76
Feed/Separation Pressure....6-76
Registration....6-76
6.8.2 PAPER FEED MECHANISM....6-77
6.8.3 PAPER FEED/SEPARATION PRESSURE ADJUSTMENT MECHANISM....6-78
Paper feed pressure....6-78
Paper separation pressure....6-79
Friction Pad Exchange Mechanism....6-80
Paper Types....6-81
6.8.4 PAPER REGISTRATION MECHANISM....6-83
Registration Roller Drive....6-83
Registration Roller Up/Down Mechanism....6-85
6.8.5 PAPER FEED CONTROL MECHANISM....6-86
Registration Roller....6-86
Paper Slip Correction....6-86
Feed Speed Correction....6-86
6.8.6 PAPER FEED RETRY MECHANISM....6-87
6.8.7 REGISTRATION ROLLER PRESSURE RELEASE MECHANISM....6-88
6.8.8 DOUBLE FEED DETECTION....6-89
Mechanism....6-89
Recovery from Double Feed....6-90
6.8.9 PAPER TABLE ANGLE ADJUSTMENT MECHANISM....6-91
6.8.10 PAPER TABLE UP/DOWN MECHANISM....6-92
Paper Table Drive Mechanism....6-92
6.8.11 PAPER SIDE FENCE MECHANISM....6-93

6.8.12 SIDE FENCE LOCK LEVER....6-94
6.8.13 DETECTION MECHANISMS....6-95
Paper Size and Paper End Detection....6-95
Table Upper/Lower Limit Detection and Paper Height Control....6-96
Paper Table Open Detection....6-96
Paper Amount Detection....6-97
6.8.14 PAPER FEED TIMING....6-98
Paper feed timing for maximum length paper (447mm)....6-98
6.9 PRINTING AND PRESSURE CYLINDER....6-100
6.9.1 OVERVIEW....6-100
6.9.2 PRESSURE CYLINDER....6-101
6.9.3 PAPER CLAMPING....6-102
6.9.4 PRINTING PRESSURE MECHANISM....6-103
6.9.5 PRINTING PRESSURE CAM SHIFTING FOR A3/A4 SIZE MASTERS....6-104
6.9.6 PAPER RELEASE PAWLS MECHANISM....6-105
6.9.7 PAPER FEED CONTROL MECHANISM....6-106
Paper Feed Start Timing Detection....6-106
Detection and Feedback of Fluctuations in Pressure Cylinder Rotation....6-106
6.9.8 PRESSURE CYLINDER DRIVE MECHANISM....6-107
Overview....6-107
Pressure Cylinder HP Return Mechanism (Manual Pressure Cylinder Rotation)....6-108
6.9.9 PRINT PRESSURE ADJUSTMENT MECHANISM....6-109
Mechanism....6-109
Auto cycle printing, from master making....6-110
Only master making....6-110
Only printing....6-110
6.9.10 TIMING....6-111
6.10 PAPER DELIVERY....6-112
6.10.1 OVERVIEW....6-112
6.10.2 PAPER SEPARATION FROM THE DRUM....6-113
Exit Pawl Drive Mechanism....6-113
Air Knife Mechanism....6-114
Paper pick-off plate mechanism....6-115
6.10.3 PAPER DELIVERY WING MECHANISM....6-116
6.10.4 PAPER DELIVERY TABLE MECHANISM....6-117
6.10.5 ADJUSTABLE BUFFER FINS....6-118
6.10.6 JOB SEPARATION MECHANISM....6-119
Overview....6-119
Sliding Arm Control....6-120
6.10.7 PAPER DELIVERY JAM SENSORS....6-121
Paper Delivery Jam....6-121
Paper Lower Wrapping....6-121
6.10.8 PAPER DELIVERY UNIT DRIVE MECHANISM....6-122
6.10.9 PAPER EXIT JAM DETECTION....6-123
Paper exit jam (C jam)....6-123
6.11 IMAGE UP/DOWN SHIFTING....6-124
6.11.1 OVERVIEW....6-124

6.11.2 IMAGE UP/DOWN SHIFTING MECHANISM 6-125
6.12 SECURITY MODE 6-126
6.12.1 FUNCTION OF SECURITY MODE 6-126
6.12.2 HOW TO ENABLE AND DISABLE SECURITY MODE 6-126
6.12.3 SPECIFICATIONS OF SECURITY MODE 6-126
6.12.4 MACHINE OPERATION IN SECURITY MODE 6-127
6.13 AUTO OFF MODE 6-128
6.14 ERROR DETECTION 6-129
6.14.1 PAPER FEED ERROR DETECTION (A JAM) 6-129
6.14.2 PAPER FEED ERROR DETECTION (A, B JAM) 6-129
6.14.3 PAPER DELIVERY ERROR DETECTION 6-130
Paper Delivery Error 6-130
Paper Upper/Lower Wrapping Detection 6-130
6.14.4 JAM INDICATION WHEN YOU TURN ON THE POWER 6-131
6.14.5 JAM INDICATION DURING PRINTING 6-131
6.14.6 JAM DISPLAY WHEN THE DRUM STOPS AT HOME POSITION BECAUSE OF PAPER UPPER WRAPPING 6-131
6.14.7 MASTER EJECT ERROR DETECTION 6-132
Error of Master Pick-up from Drum 6-132
Master Eject and Compression Error 6-132
6.14.8 ERROR DETECTION DURING MASTER MAKING 6-133
Master Set and Feed Error 6-133
Master Cut Error 6-134
Error During Clamping the Master to the Drum 6-134
6.14.9 ORIGINAL FEED ERROR DETECTION IN THE ADF 6-135

SPECIFICATIONS

SPECIFICATIONS

1.1 GENERAL SPECIFICATIONS 7-1

DOCUMENT FEEDER C600

SEE SECTION C600 FOR DETAILED TABLE OF CONTENTS

LARGE CAPACITY TRAY SYSTEM C641

SEE SECTION C641 FOR DETAILED TABLE OF CONTENTS

IMPORTANT SAFETY NOTICES

PREVENTION OF PHYSICAL INJURY

1. Before disassembling or assembling parts of the printer and peripherals, make sure that the power cord is unplugged.
2. The wall outlet should be near the printer and easily accessible.
3. If any adjustment or operation check has to be made with exterior covers off or open while the main switch is turned on, keep hands away from electrified or mechanically driven components.

HEALTH SAFETY CONDITIONS

1. If you get ink in your eyes by accident, try to remove it with eye drops or flush with water as first aid. If unsuccessful, get medical attention.
2. If you ingest ink by accident, induce vomiting by sticking a finger down your throat or by giving soapy or strong salty water to drink.

OBSERVANCE OF ELECTRICAL SAFETY STANDARDS

1. The printer and its peripherals must be installed and maintained by a customer service representative who has completed the training course on those models.

⚠CAUTION

The RAM has a lithium battery which can explode if handled incorrectly. Replace only with the same type of RAM. Do not recharge or burn this battery. Used RAM's must be handled in accordance with local regulations.

The danger of explosion exists if a battery of this type is incorrectly replaced. Replace only with the same or an equivalent type recommended by the manufacturer. Discard batteries in accordance with the manufacturer's instructions and local regulation.

SAFETY AND ECOLOGICAL NOTES FOR DISPOSAL

1. Dispose of replaced parts in accordance with local regulations.
2. Used ink and masters should be disposed of in an environmentally safe manner and in accordance with local regulations.
3. When keeping used lithium batteries (from the main processing units and ACU) in order to dispose of them later, do not store more than 100 batteries (from the main processing units and ACU) per sealed box. Storing larger numbers or not sealing them apart may lead to chemical reactions and heat build-up.

Symbols

This manual uses several symbols. The meaning of those symbols are as follows:

☛	See or Refer to
CT	Core tech manual
	Clip ring
	E-ring
	Screw
	Connector

INSTALLATION

DOCUMENT FEEDER C600

PREVENTIVE MAINTENANCE

REPLACEMENT AND ADJUSTMENT

LARGE CAPACITY TRAY SYSTEM C641

TROUBLESHOOTING

SERVICE TABLES

DETAILED DESCRIPTIONS

SPECIFICATIONS

TAB POSITION 1

TAB POSITION 2

TAB POSITION 3

TAB POSITION 4

TAB POSITION 5

TAB POSITION 6

TAB POSITION 7

TAB POSITION 8

SPECIFICATIONS

SPECIFICATIONS

1.1 GENERAL SPECIFICATIONS

Configuration:	Desktop
Master Process:	Digital with 600 dpi thermal head – C262
	Digital with 400 dpi thermal head – C265
Scanning (Pixel Density):	600 dpi CCD
Originals:	Sheet/Book (Less than 10kg)
Printing process:	Fully automatic stencil system, with one drum and a pressure cylinder.
Original Size:	Platen: Maximum 300 x 432 mm / 11.8" x 17.0"
	ADF: Maximum 297 x 864 mm / 11.7" x 34.0"
	Minimum 148 x 210mm / 5.8” x 8.3”
Print Paper Size:	Maximum 325 x 447 mm / 12.8" x 17.6" Minimum 70 x 148 mm / 2.8" x 5.8"
Print Paper Weight:	47.1 to 209.3 g/m^2 / 12.5 to 55.6 lb.
Printing Area:	A3: 290 x 412 mm
	DLT: 11.4” x16.6”
Printing Speed:	Print paper size B4SEF or shorter (364mm): 60, 75, 90, 105, 120, 135 sheets/minute (6 steps)
	Print paper sizes longer than B4SEF (364mm): 60, 75, 90, 105, 120 sheets/minute (5 steps)
Master Eject Box Capacity:	A3 drum: 100 masters
	DLT drum: 90 masters
	A4 drum: 140 masters
Magnification Ratios:	4 enlargement and 5 reduction

	A3 version	DLT version
Enlargement	200% 141% 122% 115%	200% 155% 129% 121%
Full Size	100%	100%
Reduction	87% 82% 71% 61% 50%	85% 77% 74% 65% 50%

Zoom: 50% to 200% (1% steps)

Power Source: North America: 120 V, 60 Hz
Europe, Asia: 220 – 240 V, 50/60 Hz

Power Consumption:

C262	Mainframe + ADF + LCS + HDD + 802.11b + PS3 module + RAM	
	US	EU, AA
Copying 60 rpm	Not above 210 W	Not above 200 W
Copying 90 rpm	Not above 235 W	Not above 230 W
Copying 120 rpm	Not above 270 W	Not above 260 W
Copying 135 rpm	Not above 285 W	Not above 270 W
Master making	Not above 340 W	Not above 340 W
Standby	Not above 52 W	Not above 52 W
Standby (Energy saver mode)	Not above 7 W	Not above 8 W

C265	Mainframe + ADF + LCS + HDD + 802.11b + PS3 module + RAM	
	US	EU, AA
Copying 60 rpm	Not above 210 W	Not above 200 W
Copying 90 rpm	Not above 235 W	Not above 230 W
Copying 120 rpm	Not above 270 W	Not above 260 W
Copying 135 rpm	Not above 285 W	Not above 270 W
Master making	Not above 355 W	Not above 355 W
Standby	Not above 52 W	Not above 52 W
Standby (Energy saver mode)	Not above 7 W	Not above 8 W

Noise Emission

	Sound Power Level	Operating Position Sound Power Level
Standby:	38 dB	24 dB
Copying 60 rpm:	73 dB	58 dB
Copying 90 rpm:	76 dB	61 dB

Copying 120 rpm:	79 dB	64 dB
Copying 135 rpm:	81 dB	68 dB

Dimensions (W x D x H)	Table Closed: 750 x 705 x 1020mm (29.5 x 27.6 x 44.5”) Table Opened: 1420 x 705 x 1130mm (55.9 x 27.6 x 40.2”) Measurement Conditions 1) With the ADF 2) With the table
Weight:	With Platen: 103.5kg (228.2 lb) With ADF: 110.5kg (243.6 lb)
Master Process Time:	C262 ADF: Not more than 25 seconds (A4 copying) Not more than 33 seconds (A3 copying) Platen: Not more than 20 seconds (A4 copying) Not more than 28 seconds (A3 copying) C265 ADF: Not more than 17 seconds (A4 copying) Not more than 20 seconds (A3 copying) Platen: Not more than 12.2 seconds (A4 copying) Not more than 16 seconds (A3 copying)
Paper Table Capacity:	1,000 sheets (55kg / 64 g/m^2 / 20 lb)
Paper Delivery Table Capacity:	1,000 sheets (55kg / 64 g/m^2 / 17 lb) 1,000 sheets (20lb paper)
Leading Edge Margin:	Less than 5mm
Trailing Edge Margin:	2 mm
Side Registration Adjustable Range:	± 10 mm *Width more than 308mm: ± 5 mm Minimum movable unit: 0.25mm
Vertical Registration Adjustable Range:	± 15 mm Minimum movable unit: 0.25mm
Master Type:	Thermal master roll type: 320 mm width, 110 m/roll Yield: 200 masters/roll (A3 Drum) 190 master/roll (DLT Drum) 320 masters/roll (A4 Drum) Maximum run length per master: 4,000 prints

Master Storage Conditions:	Temperature: 0 °C to 40 °C Humidity: 10% to 95% RH Recommended maximum storage period: Can be used up to one year after production date (if a package is opened, use the ink as soon as possible) Stack max: 4 cartons Note: Avoid areas that get direct sunlight.
Ink Type:	1000 ml cartridge type Available colors: Red, Blue, Green, Brown, Gray, Yellow, Purple, Maroon, Navy, Orange, Teal, Violet, Gold, Hunter Green, Burgundy, Reflex blue
Ink Storage Conditions:	Temperature: -5 °C to 40 °C (Optimum conditions: 15 °C to 25 °C) Humidity: 10% to 95% RH (Optimum conditions: 20% to 70% RH) Recommended maximum storage period: Can be used up to 18 months after production date (if a package is opened, use the ink as soon as possible) Stack max: 10 cartons Note: Avoid locations that get direct sunlight.
Optional Equipment:	• Color drum • A4 drum • Platen cover • Auto document feeder • TC-IIR • Large capacity tray system (LC3000R) • HDD kit: 2.5 • PC Controller PS3 module RAM module: SDRAM128, 256MB IEEE 802.11b IEEE1284

INSTALLATION

1. INSTALLATION

1.1 INSTALLATION REQUIREMENTS

Carefully select the installation location because environmental conditions have a great effect on machine performance.

1.1.1 OPTIMUM ENVIRONMENTAL CONDITION

1. Temperature —10 to 30 °C (50 to 86 °F)
2. Humidity —20 to 90 % RH
3. Install the machine on a strong and level base. The machine must be level within 5 mm (0.2") both front to rear and left to right.

1.1.2 ENVIRONMENTS TO AVOID

1. Locations exposed to direct sunlight or strong light (more than 1,500 lux).
2. Dusty areas.
3. Areas containing corrosive gases.
4. Locations directly exposed to cool air from an air conditioner or reflected heat from a space heater. (Sudden temperature changes from low to high or vice versa may cause condensation within the machine.)

1.1.3 POWER CONNECTION

1. Securely connect the power cord to a power source.
2. Make sure that the wall outlet is near the machine and easily accessible.
3. Make sure the plug is firmly inserted in the outlet.
4. Avoid multi-wiring.
5. Do not pinch the power cord.

1.1.4 ACCESS TO THE MACHINE

Put the machine near a power source, and give clearance as shown below.

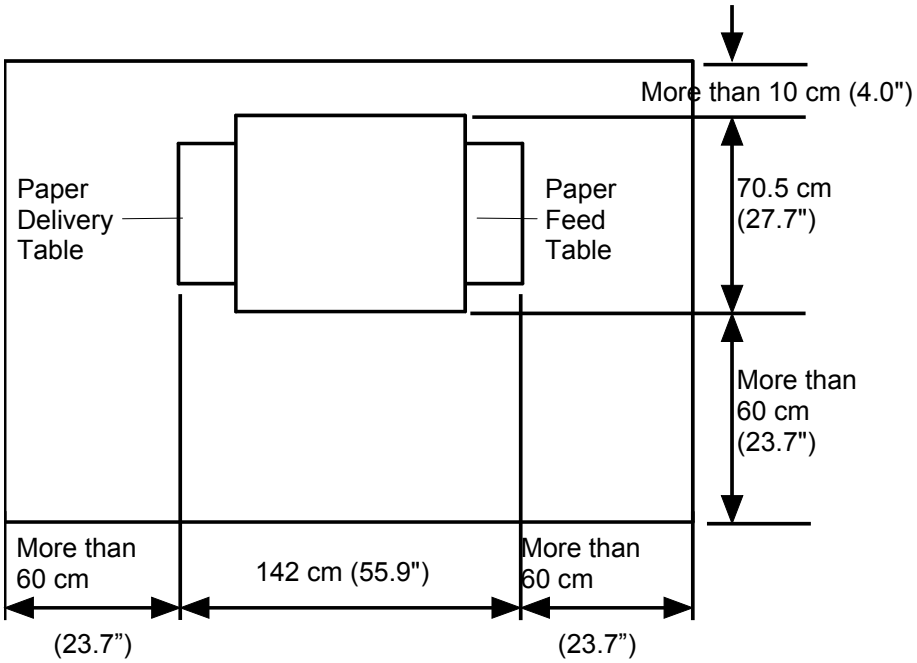

1.1.5 POWER SOCKETS FOR PERIPHERALS

⚠CAUTION

Rating Voltage for Peripherals

Make sure to plug the cables into the correct sockets.

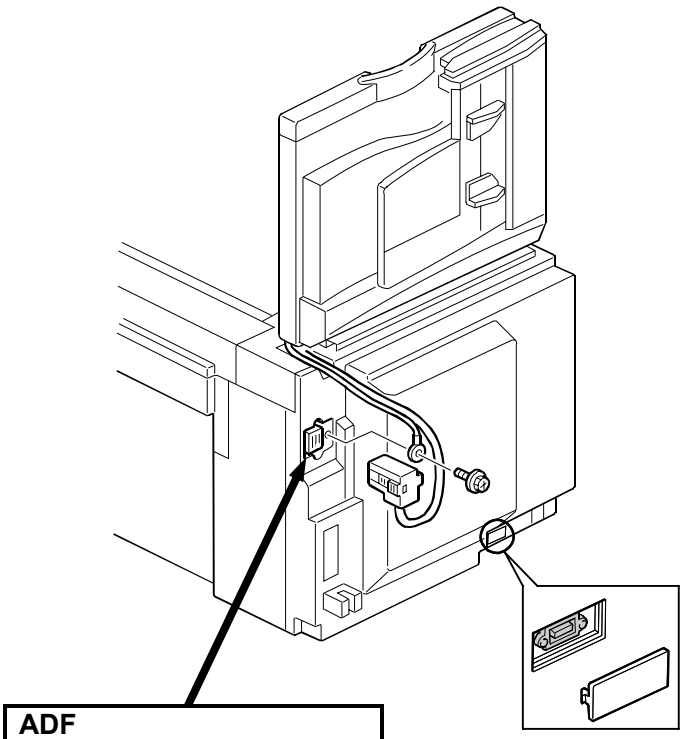

ADF

"Rating Voltage of Output Connector for Accessory: Max. DC 24 V"

LCOT

"Rating Voltage of Output Connector for Accessory: Max. DC 24 V"

1.2 INSTALLATION PROCEDURE

1.2.1 MAIN BODY

Accessory Check

Make sure that you have all the accessories listed below:

Description	Quantity
1. Model name plates (C262-22, C265-52 only)	1
2. Model name plate cover (C262-22 and C265-22 only)	1
3. Carrying handle stopper	4
4. Ferrite Core	1
5. NECR (C262-27, C262-52, C265-27, C265-52 only)	1
6. Manuals for this machine (Printed Manuals)	1
7. Easy Operation Guide (Printed Manuals)	1
8. Safety Information (Printed Manuals)	1
9. Preparations for use as a Printer (Printed Manuals)	1
10. CD-ROM Manuals (Including Operating Instructions, Printer Reference, PostScript3 Supplement and Network Guide)	1
11. CD-ROM (Document Management Utility)	1
12. CD-ROM (Printer Driver)	1

Installation Procedure

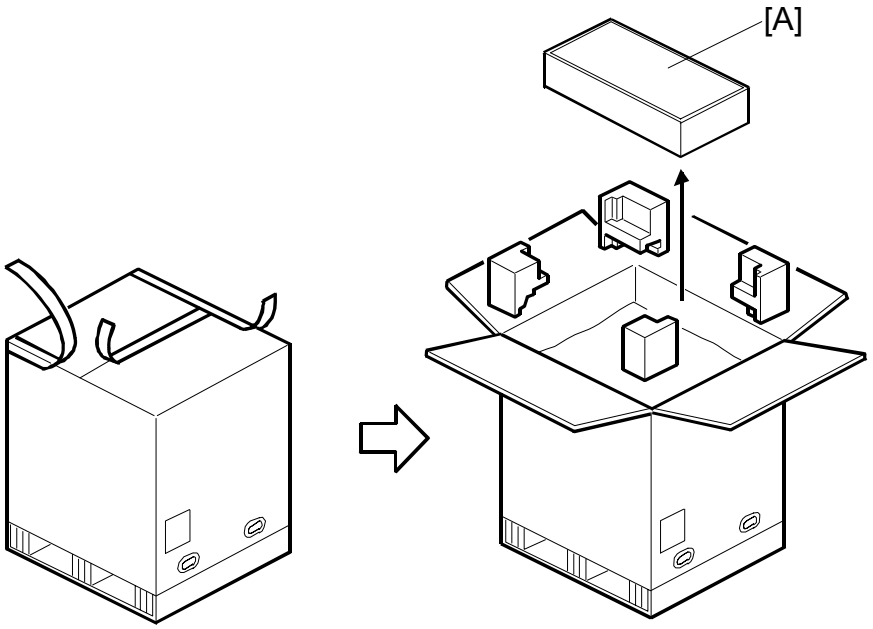

⚠CAUTION

Open the box from the top. If the box is lifted off the machine from the bottom, the paper delivery table may be damaged.

1. Unpack the box. Take out the small box [A], which contains the paper delivery table.

NOTE: First, open the top of the box, and remove the small box inside [A]. This prevents the paper delivery table (inside the box [A]) from being damaged.

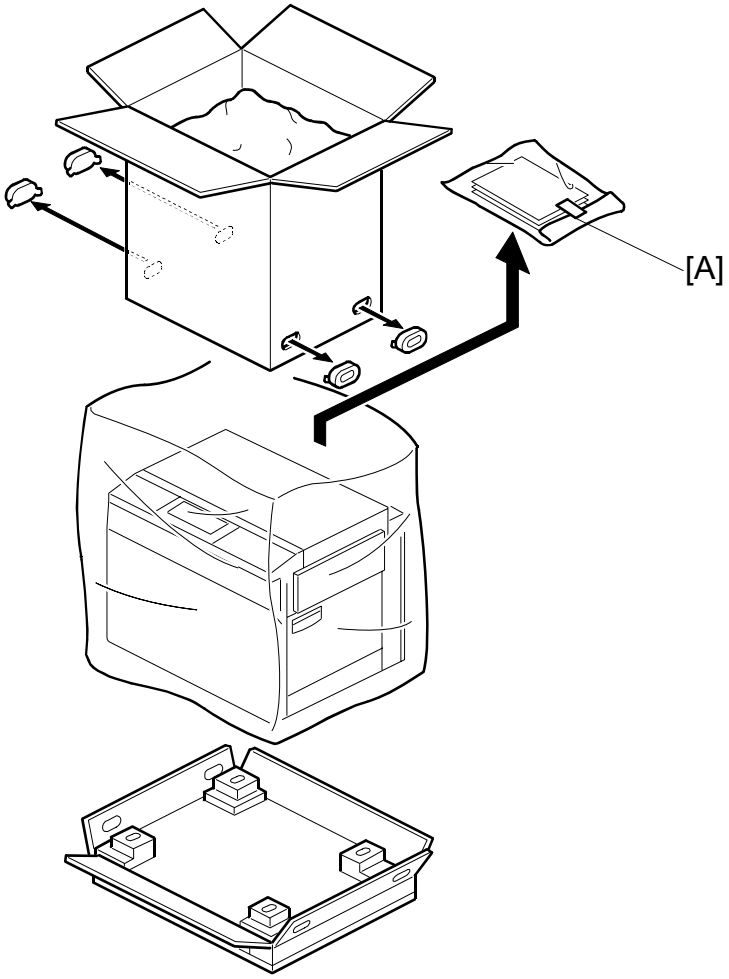

2. Continue to unpack the box. Make sure that the accessory bag [A] is included.

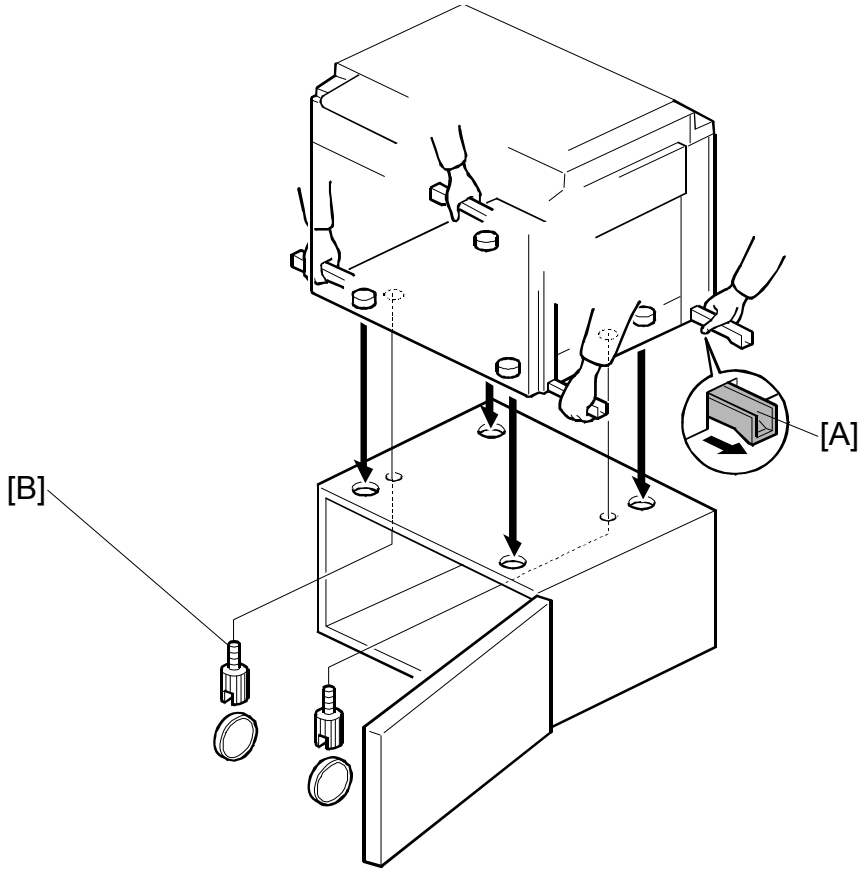

3. When you install the optional table, mount the machine on the table, as shown. (2 screws [B] packed with the table).

⚠CAUTION

Only handle with the carrying handles [A] on the bottom of the machine. Otherwise, your fingers may be pinched between the main body and the table during installation. (The gap between the bottom of the main body and the table is very small.)

Be sure to attach screws [B], or static electricity will build up inside the machine.

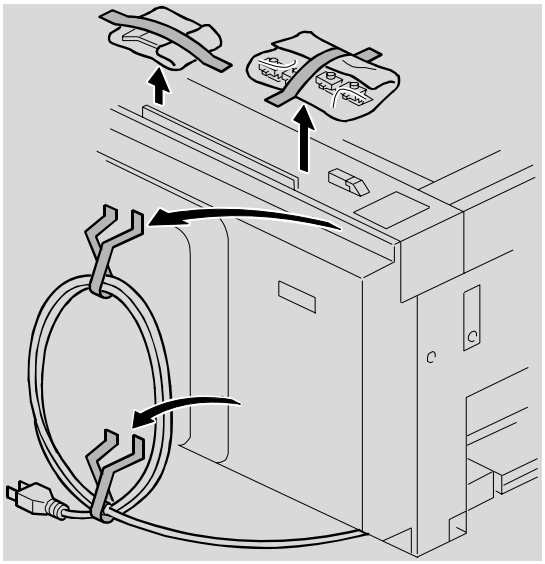

C262I044.WMFF

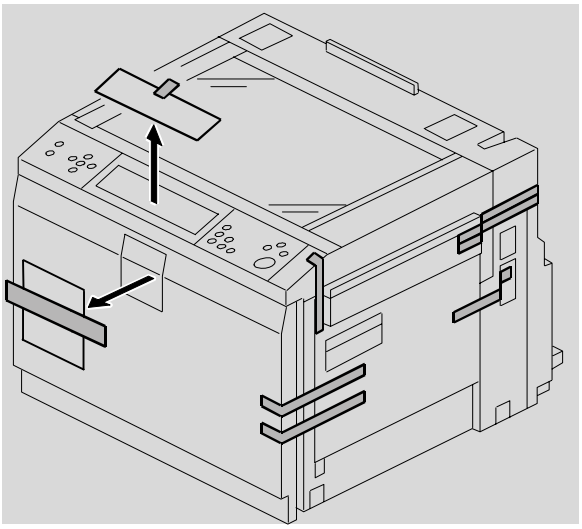

C262I046.WMFF

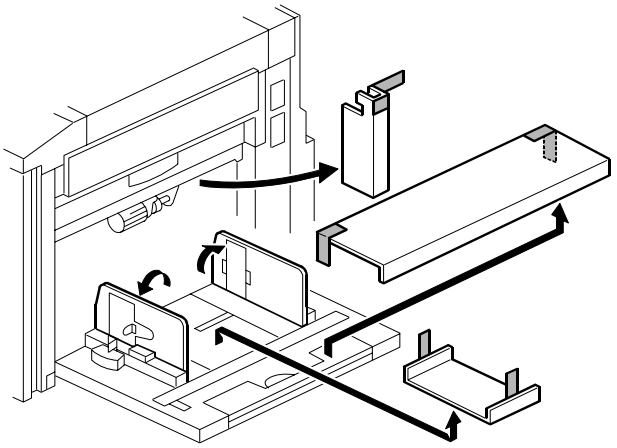

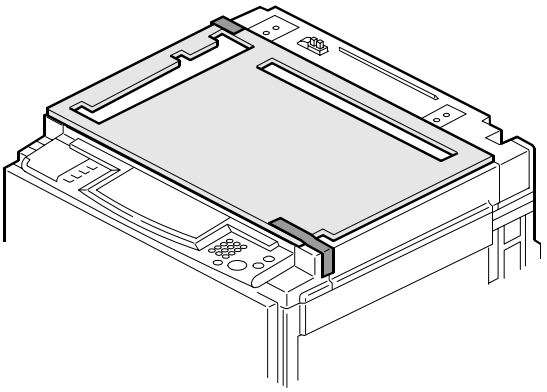

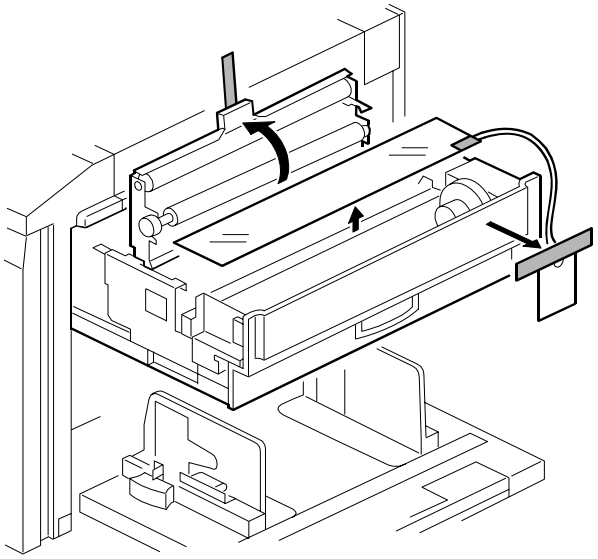

4. Remove the tape that secures the covers and units.

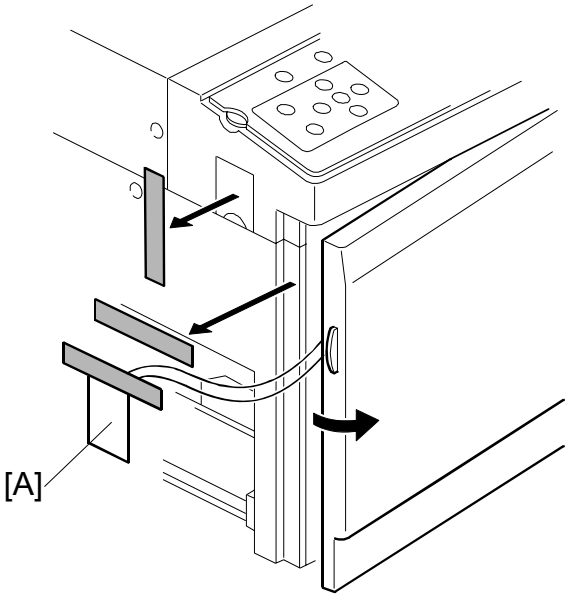

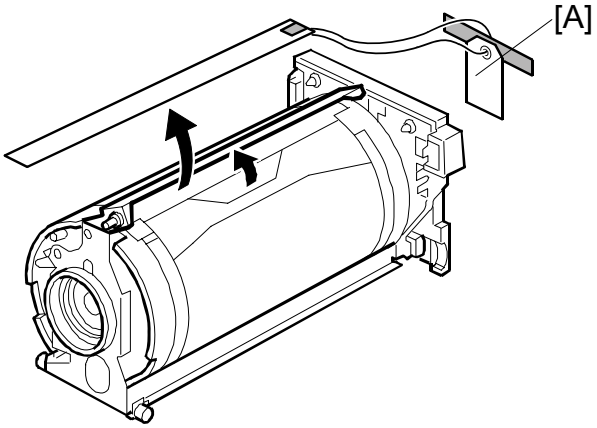

5. Open the front cover, and slide out the drum unit. Then, remove the master clamper protective sheet [A].

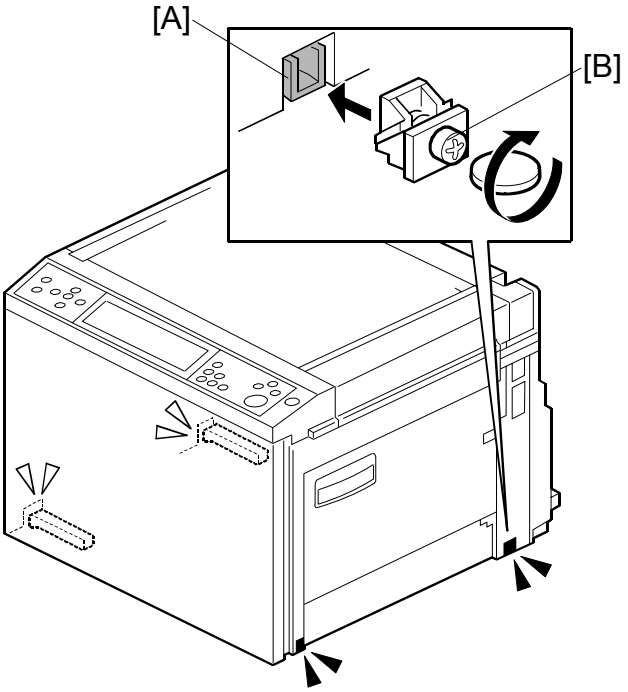

6. Insert the carrying handle [A] in the machine, and attach the carrying handle stopper [B].

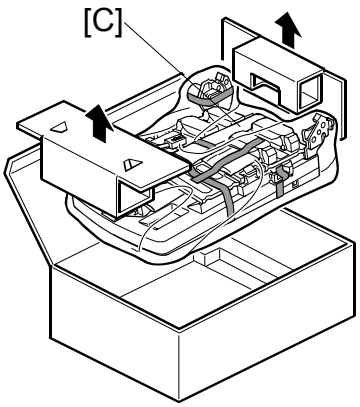

7. Take out the paper delivery table [C] from the box.

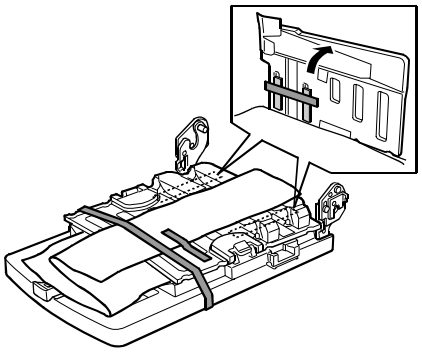

8. Remove the tape that secures the paper delivery table.

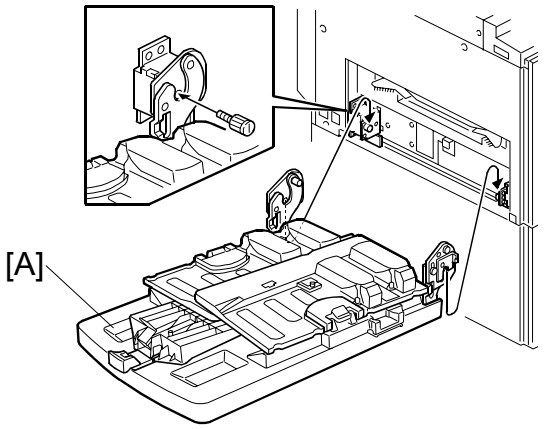

9. Attach the paper delivery table [A] (🔩 x 2).

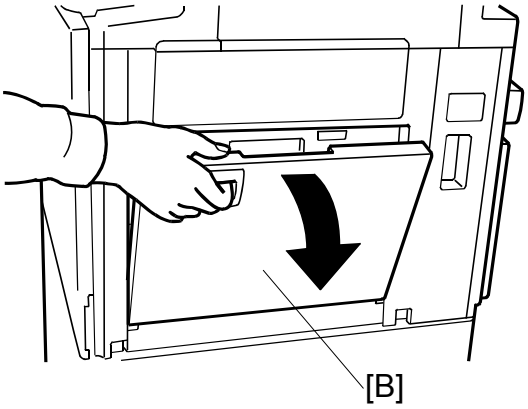

10. Open the paper table [B].

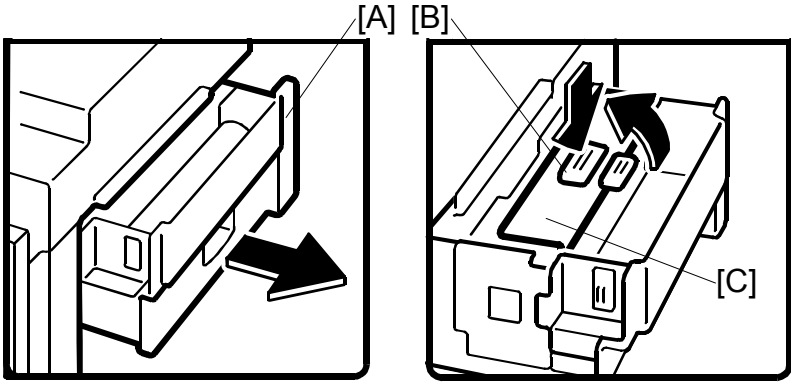

11. Pull out the master making unit [A] until it stops.
12. Push the button [B], and open the master guide [C].

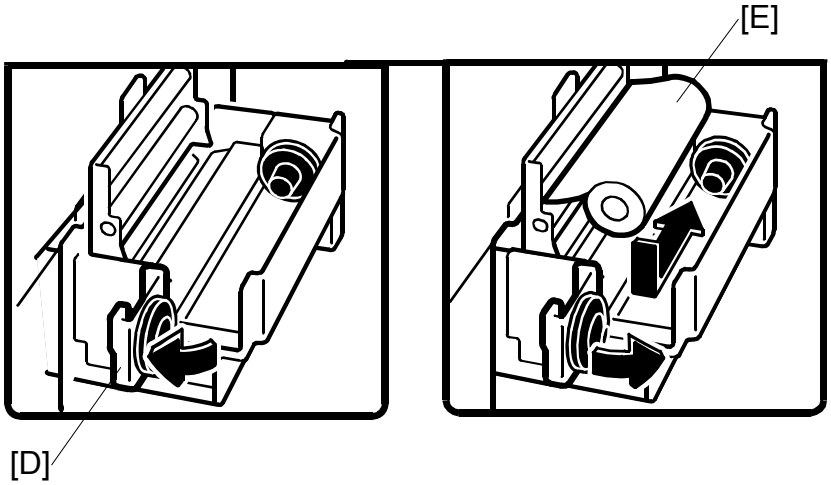

13. Open the master tray cover [D].
14. The master roll [E] must be positioned as shown in the illustration.
15. Close the master tray cover [D].

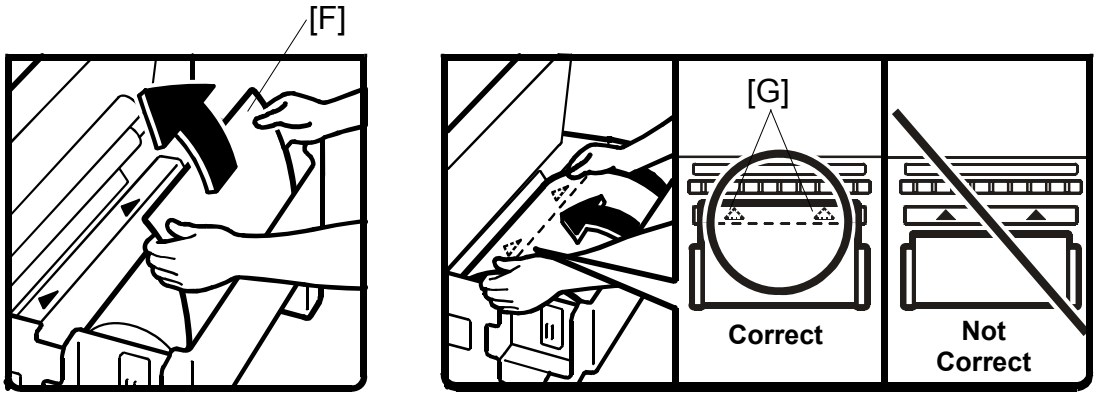

16. Insert the master roll [F].
    NOTE: Make sure the leading edge reaches the interior [G] of the master holder.

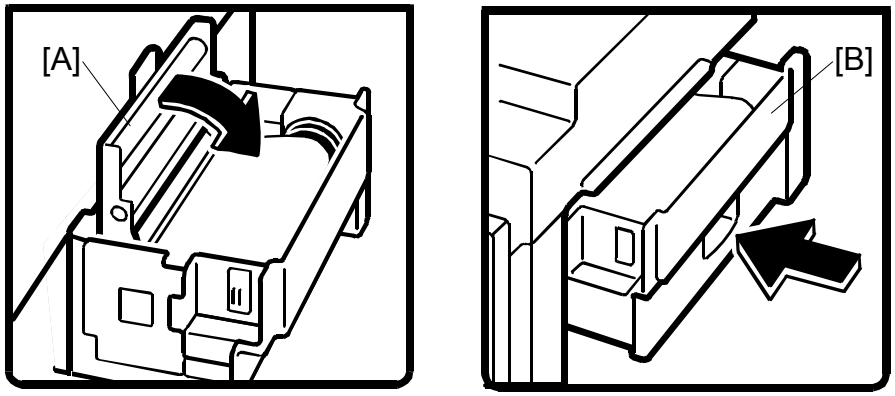

17. Close the master guide [A].
18. Push in the master making unit [B] until it stops.

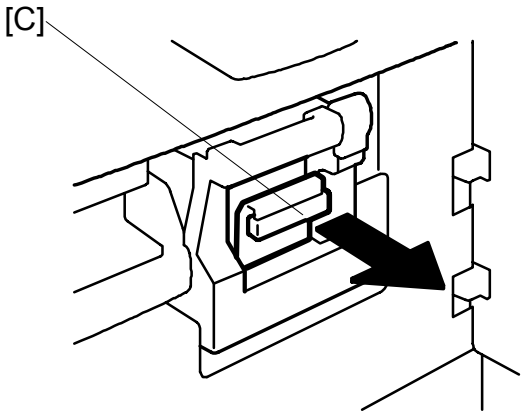

19. Open the front cover, and pull out the ink holder [C].

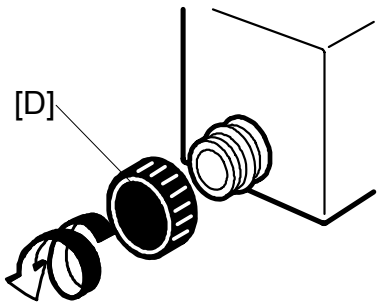

20. Remove the cap of the new ink cartridge [D].

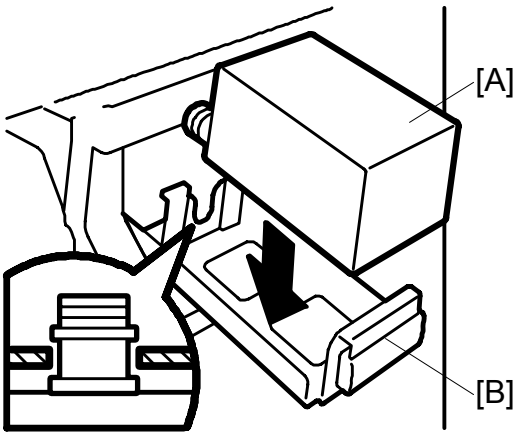

21. Insert the new ink cartridge [A] into the ink holder [B].

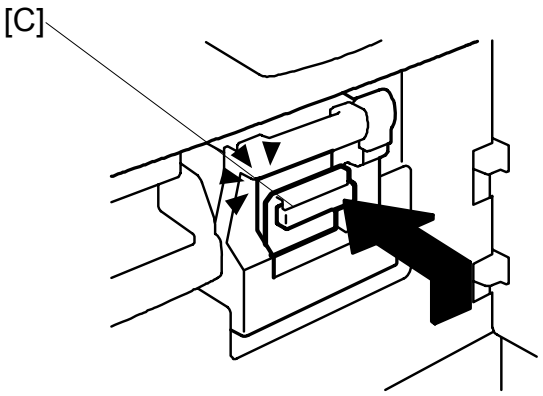

22. Return the ink holder [C] to its original position until it clicks, and close the front cover.

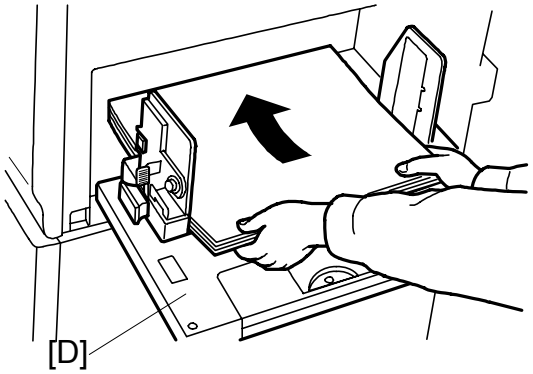

23. Put a stack of paper on the paper table [D].

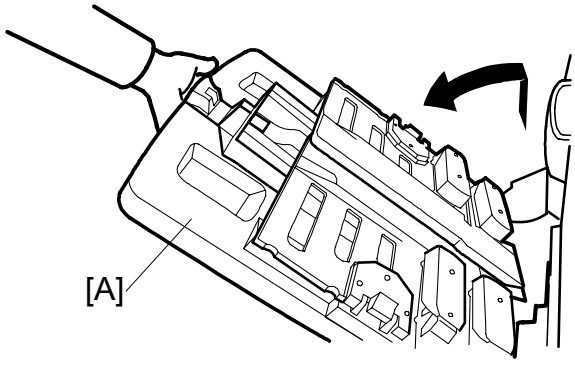

24. Raise the paper delivery table [A] slightly, then gently lower it.
25. Lift the side plates and the end plate, and adjust them to the paper size.
26. Install the platen cover or ADF (☛ 1.2.2 or ☛ 1.2.3).
27. Firmly insert the plug in the wall outlet.
    NOTE: Make sure that the wall outlet is near the machine and easily accessible.

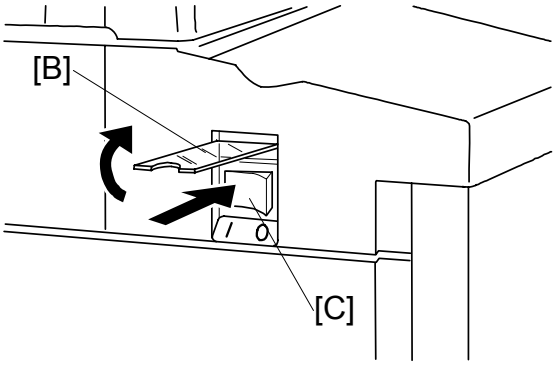

28. Open the main switch cover [B], and turn on the main switch [C].
29. Place the original on the exposure glass or ADF.
30. Make a master and make 30 prints with this master. Do this at least three times, until the image quality is acceptable.
    NOTE: This is a new drum. Because of this, before the first print is made, ink is supplied automatically. This takes 2 minutes.

Date/Time Setting

Use the User Tools menu to set the current date and time.

- On the operation panel, press the User Tools key.
- On the touch-panel, press “System Settings”.
- Push the “Timer Setting” tab.
- Push “Set Date” then enter the date.
- Push “Set Time” then enter the time.

SP Codes Setting

SP No.	Menu	Function
SP3-001-6	Tel. Number for Service	Do this SP and input the contact numbers of the customer engineer. These numbers are shown when a service call is issued.
SP3-001-9	Master Name Input	These names appear when the user pushes the Inquiry button on the User Tools screen.
SP3-001-10	Ink Name Input	

Changing the operation panel language

There are only two languages in the machine. If you need to change the language, please refer to the firmware update procedure in section 5.5.

1.2.2 PLATEN COVER (OPTION)

Accessory Check

Check the quantity and condition of the accessories in the box against this list:

Description	Quantity
1. Stepped Screw	2

Installation Procedure

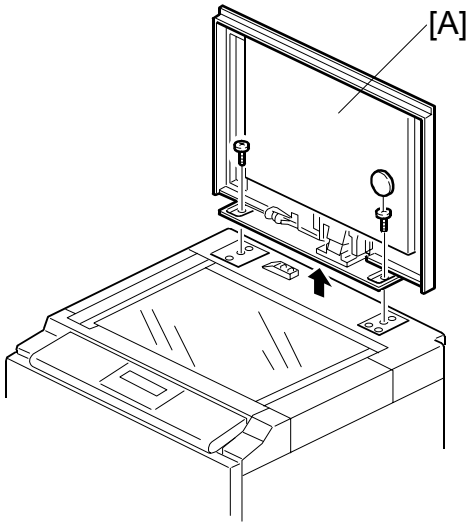

1. Install the platen cover [A] (x 2).

1.2.3 ADF (OPTION)

Accessory Check

Check the quantity and condition of the accessories in the box against this list:

Description	Quantity
1. Stepped Screw	2
2. Screws	3
3. Screwdriver	1
4. DF Exposure Glass	1
5. Decal - Exposure Glass	1
6. Decal - Scale - mm	1
7. Decal - Scale - inch	1
8. Scale Guide	1
9. Stabilizer Bracket	2
10. Thumbscrew	4
11. Caution Label	1

Installation Procedure

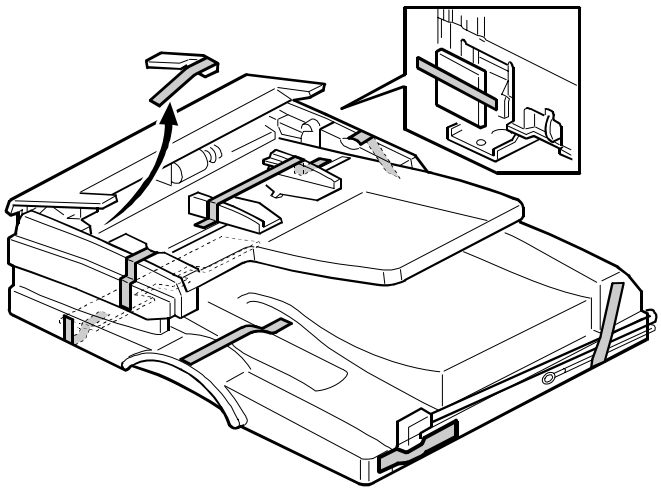

1. Remove the strips of tape.

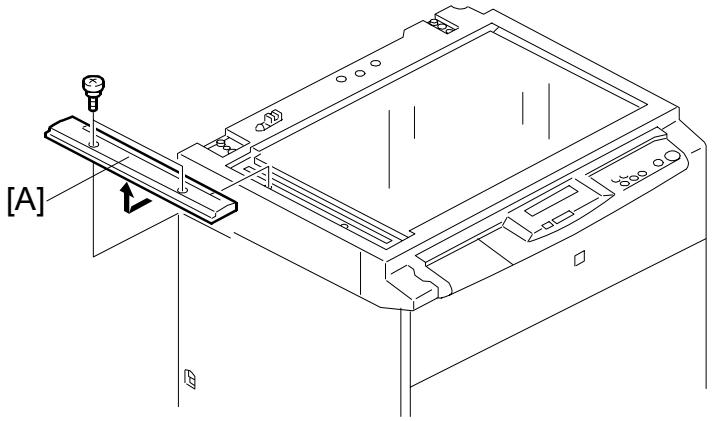

2. Remove the left scale [A] (x 2).

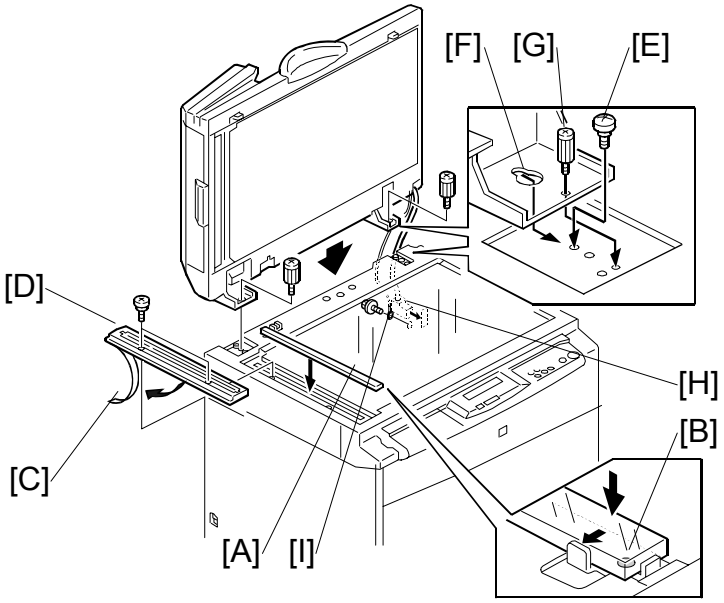

3. Place the DF exposure glass [A] on the glass holder.
   NOTE: When installing the DF exposure glass, make sure that the white dot [B] is positioned at the front side, as shown.
4. Peel off the backing [C] of the double-sided tape attached to the rear side of the scale guide [D], then install the scale guide (2 screws removed in step 2).
5. Install the two stud screws [E].
6. Mount the DF by aligning the holes [F] in the DF with the stud screws, then slide the DF to the front as shown.
7. Secure the DF unit with two screws [G].
8. Connect the cables [H] and cable [I] to the main body.

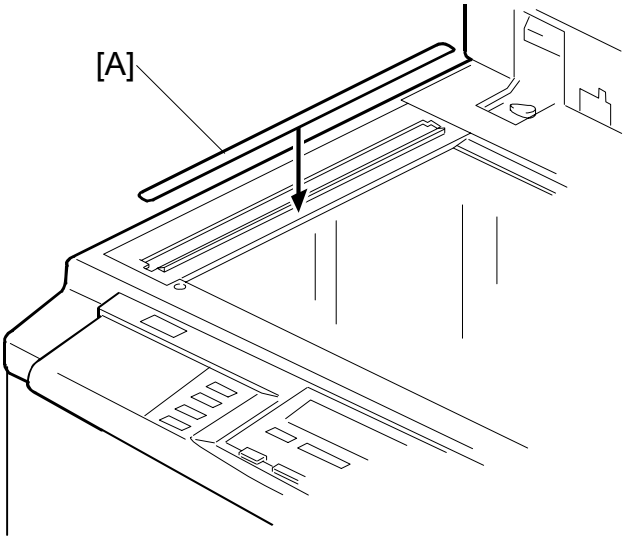

9. Attach the scale decal [A] as shown.
10. Connect the power cord, then turn the main switch on.
11. Make a full size copy with the ADF. Then check to make sure the side-to-side and leading edge registrations are correct. If they are not, adjust their values (do the adjustment procedures in section 3.4).

ADF stabilizer installation

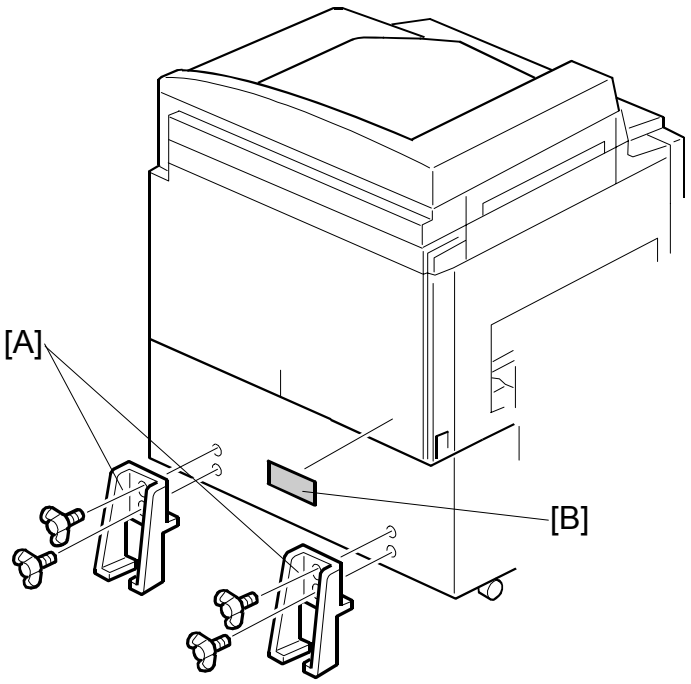

1. Attach the two stabilizer brackets [A] to the back of the table using the thumbscrews (x 4).
2. Attach the caution label [B], as shown.

⚠CAUTION

This procedure must be done to prevent the machine from falling backwards when the ADF is open.

1.2.4 ADDITIONAL DRUMS (OPTION)

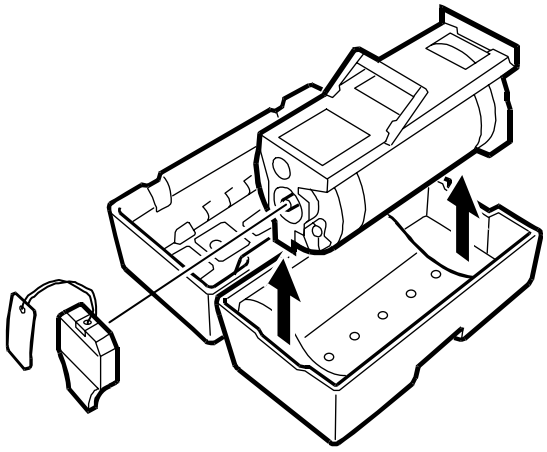

There are three types of drum units:

A3 Size: Color or black

DLT Size: Color or black

A4 Size: Black only

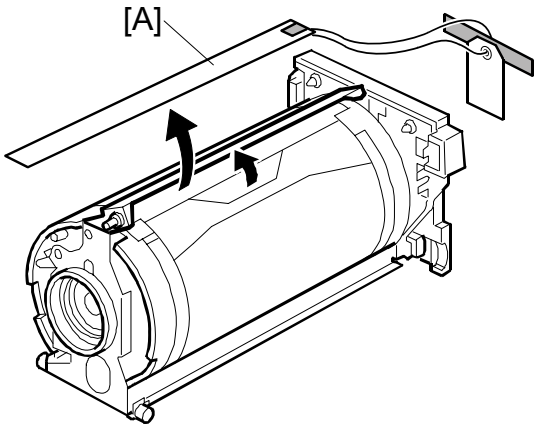

1. Remove the master clamper protective sheet [A] from the drum unit.
2. Remove the tape that secures the ink holder.

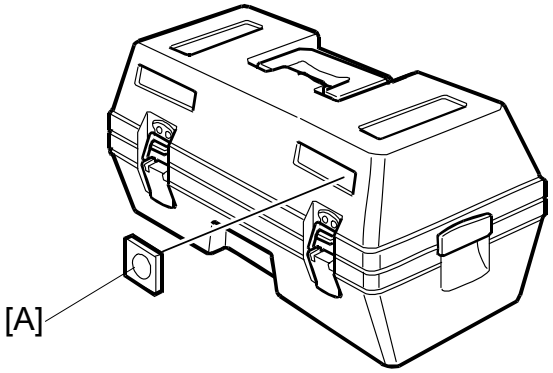

3. Attach a color indicator decal [A] to the drum case. The decal must be the same color as the ink in use.
4. Remove the drum unit.
5. Leave the master wrapped around the removed drum, to protect the drum from dust and from drying.
   NOTE: If the user is concerned about security, make a new blank master to wrap around the drum. At this time, the user's master (now on the drum) will go into the eject box, which is locked.
6. Keep the removed drum unit in the drum case.
7. Install the drum unit.
   NOTE: The color drum indicator on the operation panel stays lit when a drum is installed in the machine.
8. Remove the ink cartridge cap.
9. Insert the ink cartridge in the ink holder.

10. Make sure that SP 2-10-1~4 and DPS902 [A] have the correct settings for the color of ink that is used.

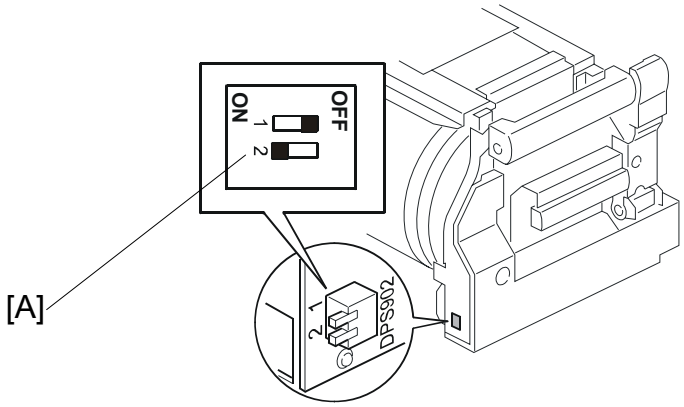

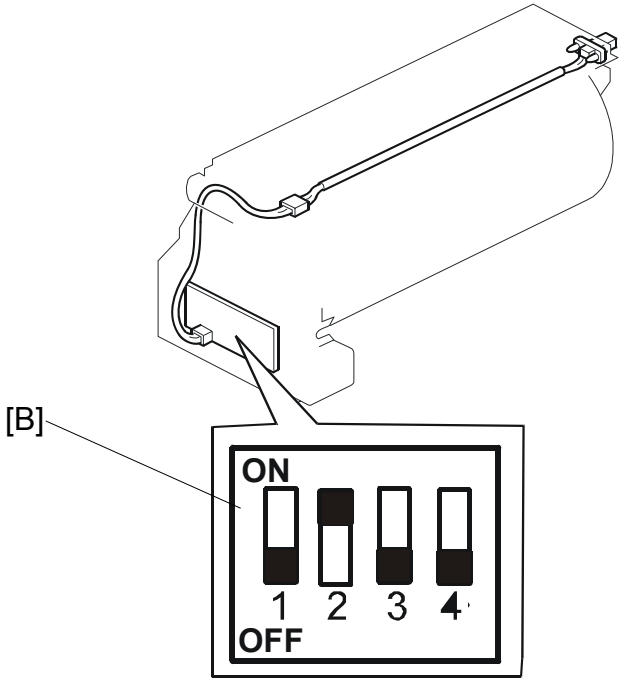

1) First, set the dip switch 901 (for drum-type detection) on the ink detection board [B] to 'color drum'. To do this, DIPSW 901-1 must be off and 901-2 must be on.
2) Then, set the DPS902 dip switches [A] on the drum to specify the ID of the color.

Four color IDs can be recognized.

DPS902	-1	-2
ID0	OFF	OFF
ID1	ON	OFF
ID2	OFF	ON
ID3	ON	ON

3) Then, with SP 2-10-1 to -4, you can specify the meaning of each of these 4 ID codes.
   - 2-10-1 specifies the meaning of ID0
   - 2-10-2 specifies the meaning of ID1
   - 2-10-3 specifies the meaning of ID2
   - 2-10-4 specifies the meaning of ID3

   There are 15 possible colors that can be specified with SP 2-10-1 to -4.

Allocation of color codes							
0	**1**	**2**	**3**	**4**	**5**	**6**	**7**
Other	Red	Blue	Green	Brown	Gray	Yellow	Purple
8	**9**	**10**	**11**	**12**	**13**	**14**	
Maroon	Navy	Orange	Teal	Red Base	Blue Base	Yellow Base	

   Default: 0 (other)

   For example, you install a drum with DPS 902-1 and -2 both set to OFF (this means 'ID0'). If this drum contains blue ink, then set SP 2-10-1 to 2 (blue). Then 'blue' will be shown on the display panel when this drum is installed.

   The names in the above table are fixed in the software. So, for example, if the drum contains gold-coloured ink, the selected color should be 14 (yellow base).

11. Place the original on the exposure glass or ADF.
12. Make a master and make 30 prints with this master. Do this at least three times, until the image quality is acceptable.
    NOTE: This is a new drum. Because of this, before the first print is made, ink is supplied automatically. This takes 2 minutes.

1.2.5 EXTENSION HDD TYPE 1 (OPTION)

Accessory Check

Check the quantity and condition of the accessories in the box against this list:

Description	Quantity
1. HDD	1

Installation Procedure

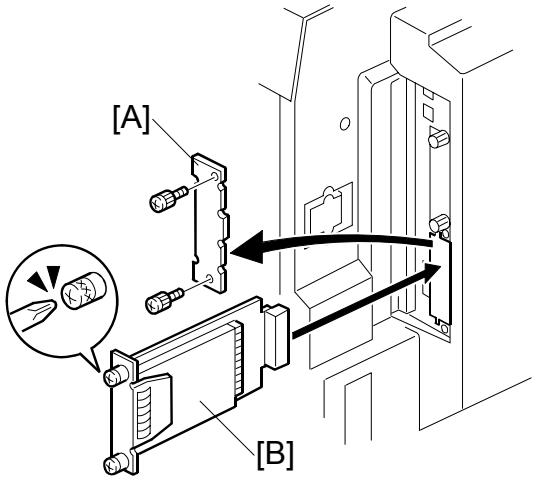

1. Turn the machine off.
2. Remove the slot cover [A] (🔩 x 2).
3. Install the HDD [B] in Slot B and secure it with the screws (🔩 x 2).
4. Turn the machine on and print a configuration page to make sure that the machine can see the Printer Hard Disk Drive (☛ 1.2.10):

   User Tools> Online Printer Features> List/Test Print> Configuration Page

After you turn the power on, the machine displays 'Please wait'. Stamp data is being transferred to the hard disk. This takes about 1 minute.

If the disk is not formatted, the machine will automatically format the disk and transfer the stamp data.

NOTE: If necessary, you can format the hard disk with SP 7-7-1. But the stamp data will not transfer automatically. So, after you format the hard disk, you must copy the stamp data to the hard disk with SP 8-2-6.

CAUTION: When you replace the hard disk, be careful about handling the old hard disk, because it contains the user's private information.

1.2.6 POSTSCRIPT3 BOARD TYPE 2 (OPTION)

Accessory Check

Check the quantity and condition of the accessories in the box against this list:

Description	Quantity
1. DIMM	1
2. Decal - PostScript	1

Inserting DIMMs

Read this section carefully before installation, so that you know how to insert the DIMMs correctly.

⚠CAUTION

Follow the procedure below to connect the DIMMs to the controller board. Incorrect insertion can damage the controller board or cause a bad connection between the DIMM and controller contacts. If the upper contact is pushed in and bent, the resulting poor connection could cause the entire system to not operate.

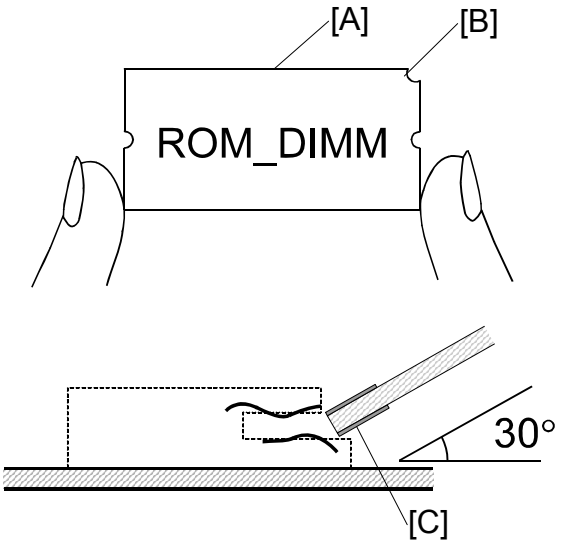

1. Hold the ROM DIMM with the edge connector [A] pointing toward the slot and the notch [B] on the DIMM in the upper right corner.
2. Insert the edge connector [C] into the slot at a 30-degree angle from the surface of the board.
   NOTE: If the angle is too low, the upper contact could bend.
3. Move the outside edge of the ROM DIMM up and down slightly until it works into the connector, then gently press it down level with the controller board.

Installation Procedure

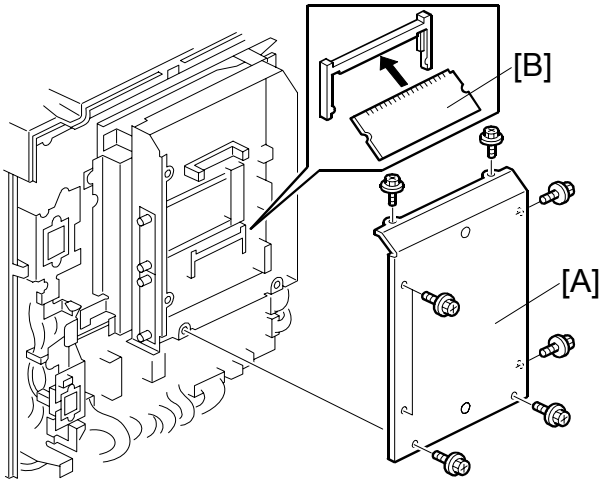

1. Turn the machine off.
2. Remove the rear cover (☞ x 6).
3. Remove the controller cover [A] (☞ x 8).
4. Insert the PS3 module [B] into Slot 2.
5. Turn the machine on and print a configuration page to make sure that the machine can see the “Adobe PostScript 3”, “Adobe PDF” (☛ 1.2.10):

   User Tools> Online Printer Features> List/Test Print> Configuration Page

⚠CAUTION
Make sure that the DIMM is inserted correctly.

1.2.7 IEEE 802.11B I/F UNIT TYPE 1 (OPTION)

Accessory Check

Check the quantity and condition of the accessories in the box against this list:

Description	Quantity
1. LAN board	1
2. LAN card	1
3. LAN card cap	1

Installation Procedure

You can only install one of these two cards, because only one slot (slot A) is available for these options:

- IEEE 802.11b I/F Unit Type 1
- IEEE 1284 Parallel Board Type 1

If a different card is installed in slot A, you must remove it before you install the IEEE 802.11b I/F Unit Type 1.

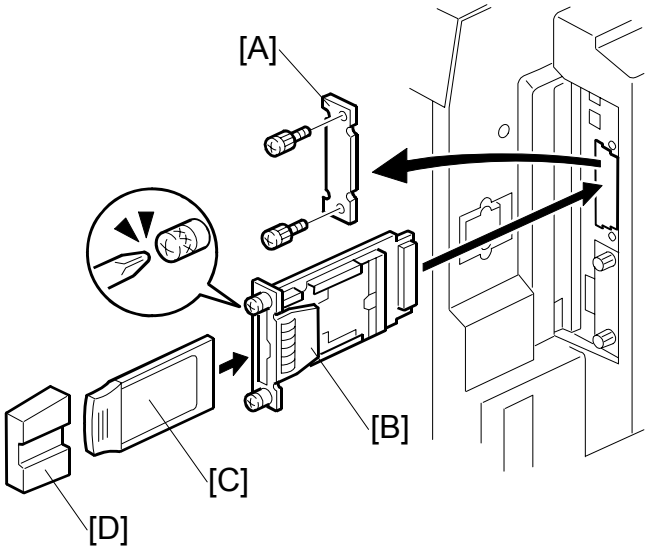

1. Turn the machine off.
2. Remove the slot cover [A] (🔩 x 2).
3. Install the LAN board [B] into slot A and secure it with the screws (🔩 x 2).
4. Insert the LAN card [C] in the slot.
5. Attach the LAN card cap [D].
6. Turn the machine on and print a configuration page to make sure that the machine can see the “IEEE 802.11b” (☛ 1.2.10):

   User Tools> Online Printer Features> List/Test Print> Configuration Page

1.2.8 IEEE 1284 PARALLEL BOARD TYPE 1 (OPTION)

Accessory Check

Check the quantity and condition of the accessories in the box against this list:

Description	Quantity
1. Parallel board	1
2. Parallel cable	1

Installation Procedure

You can only install one of these two cards, because only one slot (slot A) is available for these options:

- IEEE 802.11b I/F Unit Type 1
- IEEE 1284 Parallel Board Type 1

If a different card is installed in slot A, you must remove it before you install the IEEE 1284 Parallel Board Type 1.

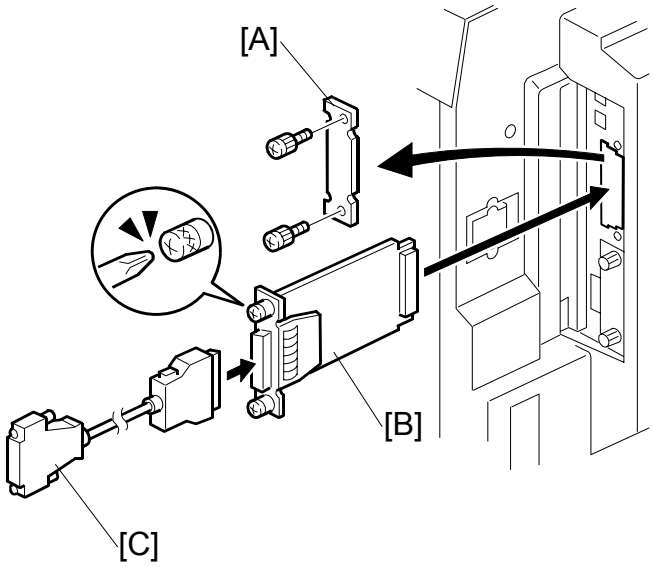

1. Turn the machine off.
2. Remove the slot cover [A] (☞ x 2).
3. Install the IEEE1284 board [B] into slot A and secure it with the screws (☞ x 2).
4. Attach the parallel cable [C].
5. Turn the machine on and print a configuration page to make sure that the machine can see the “IEEE 1284”:

   User Tools> Online Printer Features> List/Test Print> Configuration Page

1.2.9 MEMORY UNIT TYPE C (128MB/256MB) (OPTION)

Accessory Check

Check the quantity and condition of the accessories in the box against this list:

Description	Quantity
1. Memory (128MB or 256MB)	1

Installation Procedure

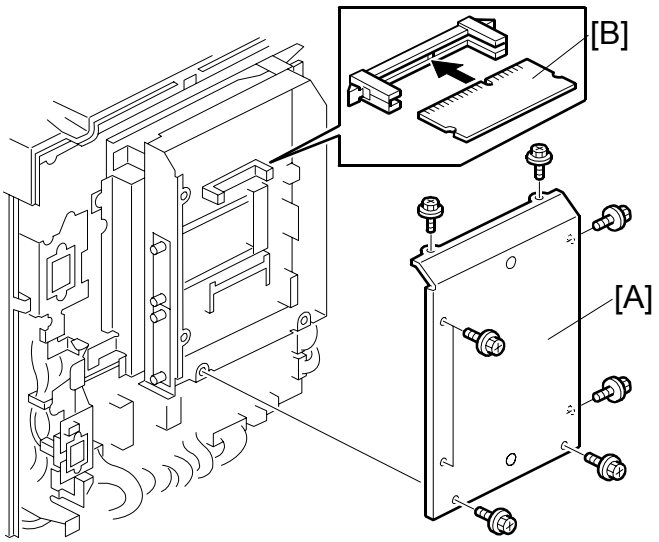

1. Turn the machine off.
2. Remove the rear cover (🔩 x 6).
3. Remove the controller cover [A] (🔩 x 8).

⚠CAUTION

Make sure that the DIMM is inserted correctly. (☛ 1.2.6)

4. Remove the SDRAM DIMM (standard onboard memory 64MB) [B] from Slot 1.
5. Insert the SDRAM DIMM (expansion memory 128MB or 256MB) [B] into Slot 1.
6. Turn the machine on and print a configuration page to make sure that the machine can see the “192MB/320MB” (☛ 1.2.10):

   User Tools> Online Printer Features> List/Test Print> Configuration Page

1.2.10 CONFIGURATION PAGE (EXAMPLE PRINTOUT)

This is an example of a configuration page.

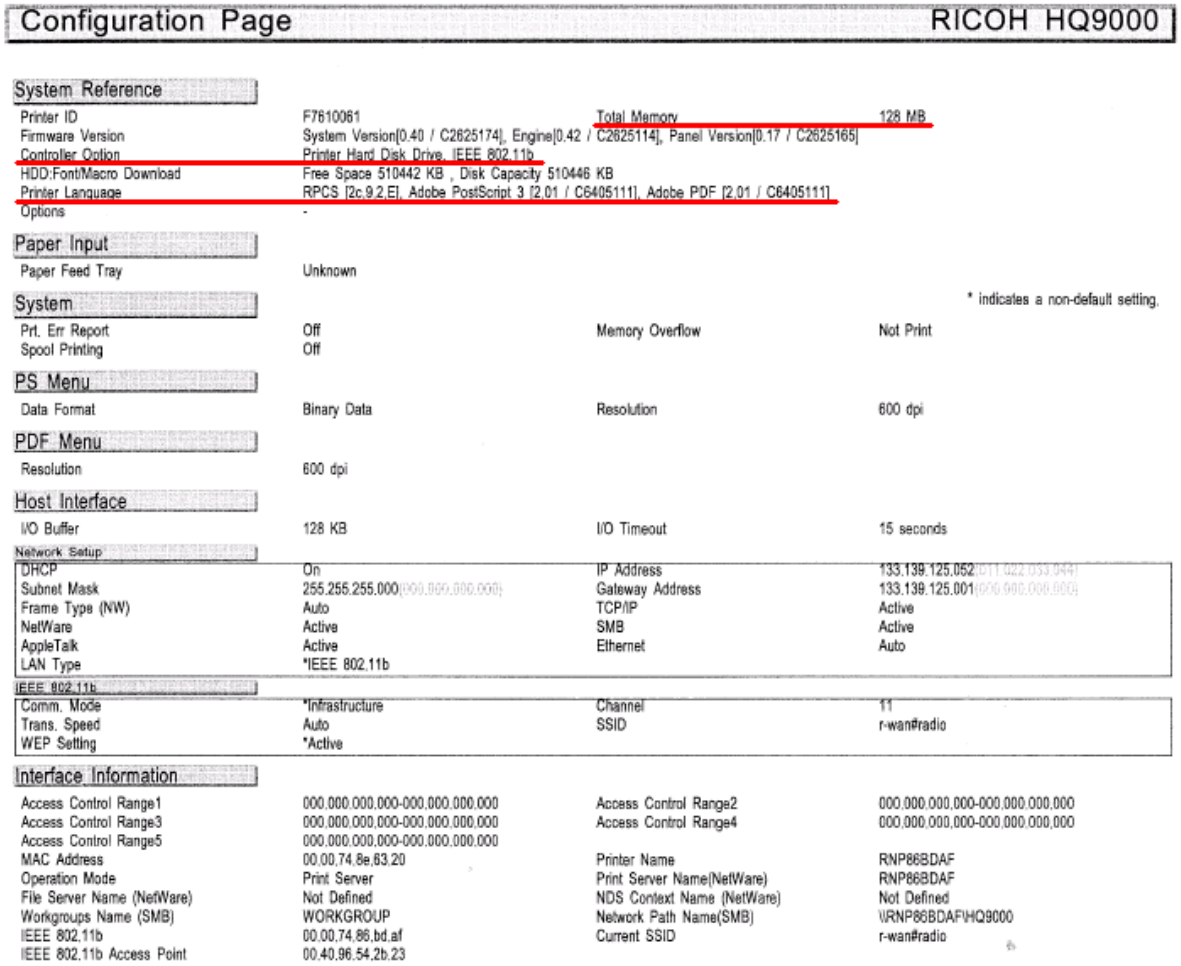

Configuration Page — RICOH HQ9000

System Reference

Printer ID	F7610061	Total Memory	128 MB
Firmware Version	System Version[0.40 / C2625174], Engine[0.42 / C2625114], Panel Version[0.17 / C2625165]		
Controller Option	Printer Hard Disk Drive, IEEE 802.11b		
HDD:Font/Macro Download	Free Space 510442 KB , Disk Capacity 510446 KB		
Printer Language	RPCS [2c.9.2.E], Adobe PostScript 3 [2.01 / C6405111], Adobe PDF [2.01 / C6405111]		
Options	-		

Paper Input

Paper Feed Tray	Unknown		

* indicates a non-default setting.

System

Prt. Err Report	Off	Memory Overflow	Not Print
Spool Printing	Off		

PS Menu

Data Format	Binary Data	Resolution	600 dpi

PDF Menu

Resolution	600 dpi		

Host Interface

I/O Buffer	128 KB	I/O Timeout	15 seconds

Network Setup

DHCP	On	IP Address	133.139.125.052
Subnet Mask	255.255.255.000	Gateway Address	133.139.125.001
Frame Type (NW)	Auto	TCP/IP	Active
NetWare	Active	SMB	Active
AppleTalk	Active	Ethernet	Auto
LAN Type	*IEEE 802.11b		

IEEE 802.11b

Comm. Mode	*Infrastructure	Channel	11
Trans. Speed	Auto	SSID	r-wan#radio
WEP Setting	*Active		

Interface Information

Access Control Range1	000.000.000.000-000.000.000.000	Access Control Range2	000.000.000.000-000.000.000.000
Access Control Range3	000.000.000.000-000.000.000.000	Access Control Range4	000.000.000.000-000.000.000.000
Access Control Range5	000.000.000.000-000.000.000.000		
MAC Address	00.00.74.8e.63.20	Printer Name	RNP86BDAF
Operation Mode	Print Server	Print Server Name(NetWare)	RNP86BDAF
File Server Name (NetWare)	Not Defined	NDS Context Name (NetWare)	Not Defined
Workgroups Name (SMB)	WORKGROUP	Network Path Name(SMB)	\\RNP86BDAF\HQ9000
IEEE 802.11b	00.00.74.86.bd.af	Current SSID	r-wan#radio
IEEE 802.11b Access Point	00.40.96.54.2b.23		

PREVENTIVE MAINTENANCE

2. PREVENTIVE MAINTENANCE

2.1 MAINTENANCE TABLE

The following items must be maintained periodically.

Symbol key: C: Clean, R: Replace, L: Lubricate, A: Adjust

⚠WARNING

Turn off the main power switch and disconnect the machine before you do any procedure in this section.

ITEM \ INTERVAL	EVERY 600K	EVERY 1200K	EVERY 2400K	EVERY 3000K	LIFE	WHEN VISIT	NOTE
Scanner/Optics							
Exposure Glass						C	Damp Cloth
Master Making Unit							
Thermal Head		C			R	C	Damp Cloth (Alcohol) Expected Life: 30K masters
Platen Roller		C				C	Damp Cloth (Alcohol) Expected Life: 30K masters
Cutter Unit					R		Damp Cloth (Alcohol) Expected Life: 30K masters
Master Feed Control Roller					R		Expected Life: 30K masters
Platen Roller					R		Expected Life: 30K masters
Paper Feed							
Paper Pick-up Roller		R				C	Damp Cloth (Alcohol)
Paper Feed Roller		R				C	Damp Cloth (Alcohol)
Friction Pads		R				C	Damp Cloth (Alcohol)
Registration Roller						C	Damp Cloth (Alcohol)
Paper End Sensor						C	Dry Cloth
Paper Length Sensor						C	Dry Cloth
Paper Pick-up Roller Bushing				L			Motor Oil (SAE #20)
Paper Feed Roller Bushing				L			Motor Oil (SAE #20)
Paper Exit Pawl Drive Gear				L			Lubricate the shaft with Alvania #2 (☛ 3.12.6.)
Main Drive Unit					R		Expected Life: 7500K prints (☛ 3.11.2.)
Image Shifting Gear				L			Lubricate the surface of the gear with Alvania #2 (☛ 3.11.6.)
Double Feed Sensor						C	Dry Cloth

Lower Wrapping Jam Sensor		C				C	Dry Cloth
Drum and Ink Supply							
Drum Master Sensor		C				C	Dry Cloth
Black Sensor Patch		C				C	Dry Cloth
Cloth Screen				R			
In/Outside of Drum		C				C	Dry Cloth (Cleaner)
Clamper magnet		C				C	Dry Cloth (Cleaner)
Ink Nozzle		C				C	Dry Cloth
Drum Drive Pin				L			Remove the drum from the machine. Lubricate the pin with Alvania #2.
Others							
Pressure Cylinder						C	Damp Cloth (Alcohol)
Paper Clamper (on Pressure Cylinder)			R			C	Damp Cloth (Alcohol)
Feed Encoder						C	
Feed Start Sensor						C	Damp Cloth (Alcohol)
Feed Encoder Brush Bracket					R		Expected Life: 6000K prints (☛ 3.10.2.)
ADF (Option)							
DF Feed Roller						C	Dry Cloth

After you replace the following parts, reset the PM counters with SP 3-4:

Cloth screen, Paper clamper, Pick-up roller, Paper feed roller, Friction pad A/B, Feed encoder brush bracket.

To reset a counter, access the SP, then push ‘Replace’ on the screen, then ‘Yes’. The replacement history for that part will appear on the screen.

REPLACEMENT AND ADJUSTMENT

3. REPLACEMENT AND ADJUSTMENT

3.1 GENERAL CAUTION

⚠CAUTION
Turn off the main power switch and unplug the machine before you attempt any of the procedures in this section.

NOTE: This manual uses several symbols. The meaning of those symbols are as follows:
☛ : See or Refer to : screw : connector : E-ring : Clip

3.2 COVERS

3.2.1 FRONT COVER, INNER COVER, KNOB COVER

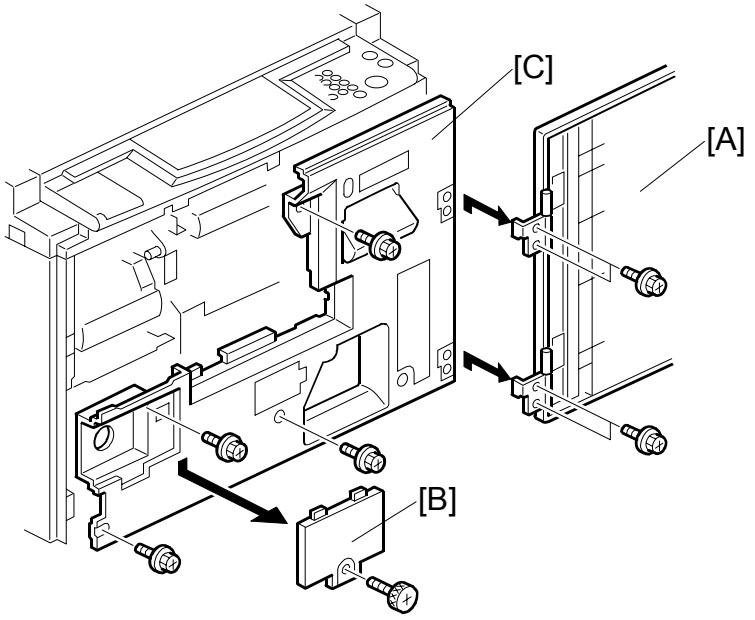

[A]: Front cover (x 4)
[B]: Knob cover (x 1)
[C]: Inner cover (x 4)

3.2.2 LEFT COVER, RIGHT FRONT AND RIGHT REAR COVERS, REAR COVER

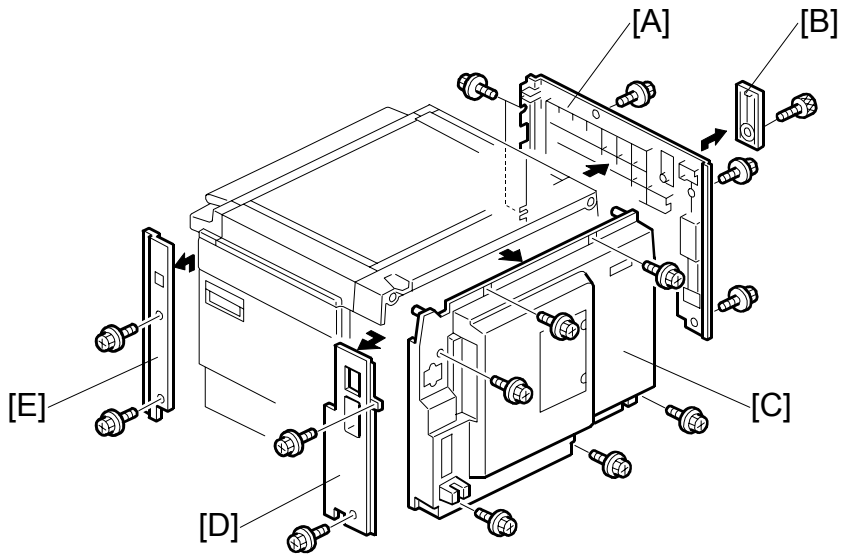

[A]: Left cover (x 5)
[B]: Cover cap (x 1)
[C]: Rear cover (x 6)
[D]: Right rear cover (x 2)
[E]: Right front cover (x 2)

3.2.3 OPERATION PANEL, LEFT SCANNER COVER, REAR UPPER COVER, RIGHT SCANNER COVER, LOWER PANEL COVER

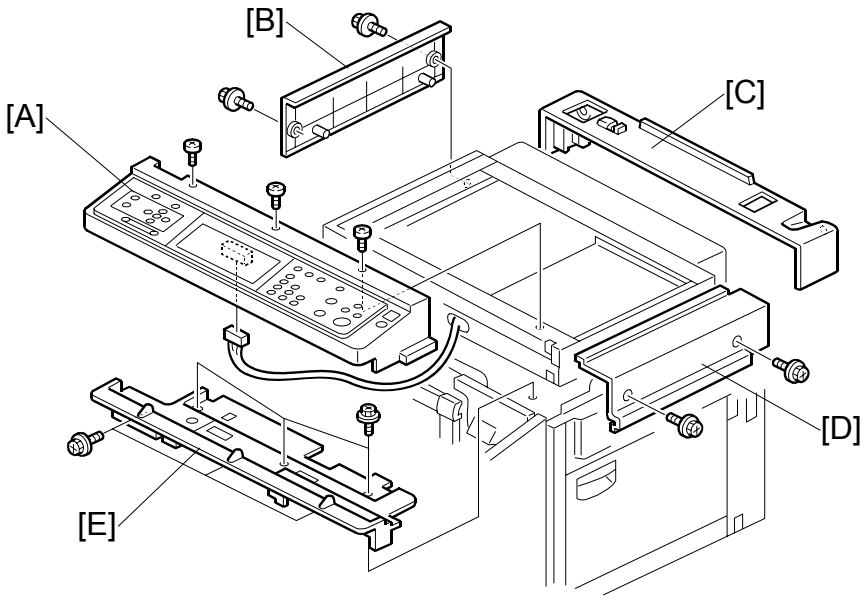

[A]: Operation panel (x 3, x 1)
[B]: Left scanner cover (x 2)
[C]: Rear upper cover
[D]: Right scanner cover (x 2)
[E]: Lower operation panel cover (x 6)

3.2.4 EXPOSURE GLASS, SCALES

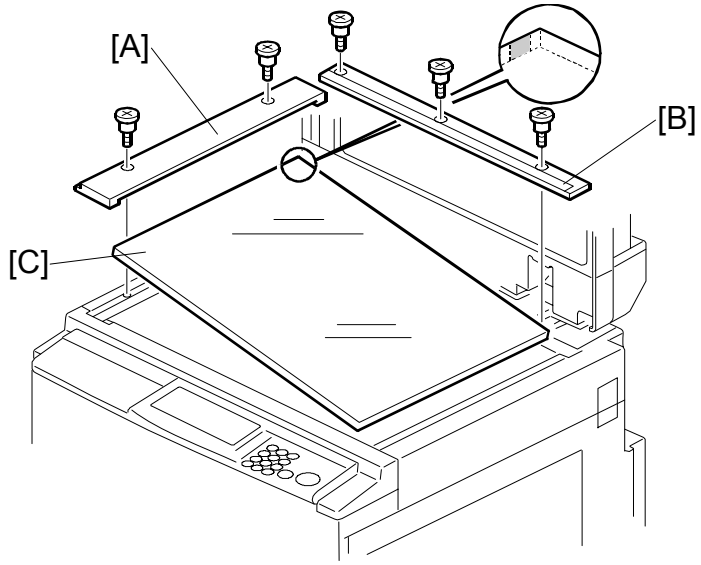

[A]: Left scale (☞ x 2)
[B]: Upper scale (☞ x 3)
[C]: Exposure glass

NOTE: When you install the glass, make sure that the dot is at the rear left corner as shown in the diagram.

3.3 SCANNER UNIT

3.3.1 SCANNER FRAME, SCANNER HP SENSOR, PLATEN COVER SENSOR, EXPOSURE LAMP

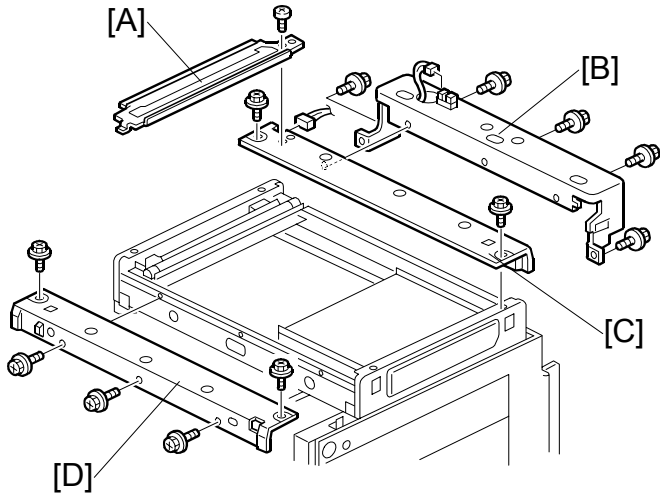

- Platen cover or ADF
- Operation panel, Left scanner cover, Rear upper cover, Right scanner cover, Lower operation panel cover (☛ 3.2.3)
- Left scale, Upper scale, Exposure glass (☛ 3.2.4)

[A]: Exposure glass bracket (🔩 x 1)
[B]: Lower rear scanner frame (🖐 x 1, 🔩 x 5)
[C]: Upper rear scanner frame (🖐 x 1, 🔩 x 2)
[D]: Front scanner frame (🔩 x 5)

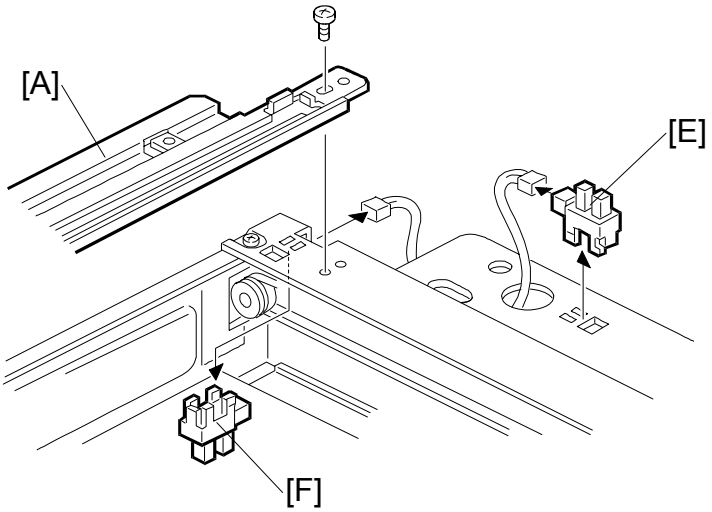

[E]: Platen cover sensor (🖐 x 1)
[F]: Scanner HP sensor (🖐 x 1)

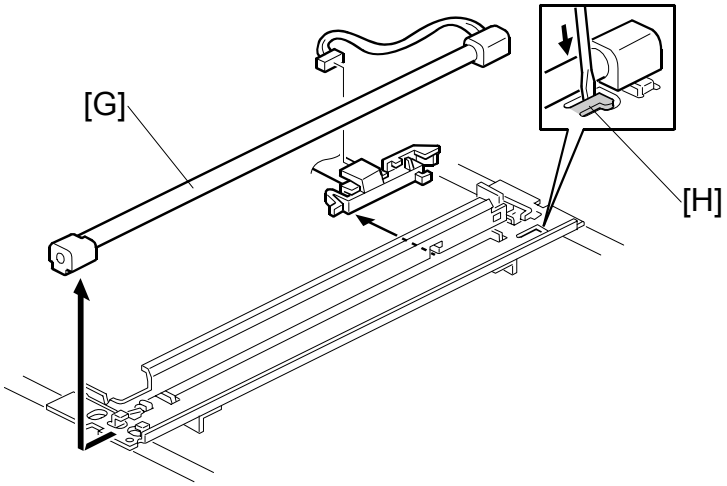

[G]: Exposure lamp (x 1)

NOTE: After you install the lamp, push the lamp holder [H] up to the original position so that it can hold the lamp properly.

3.3.2 LENS COVER

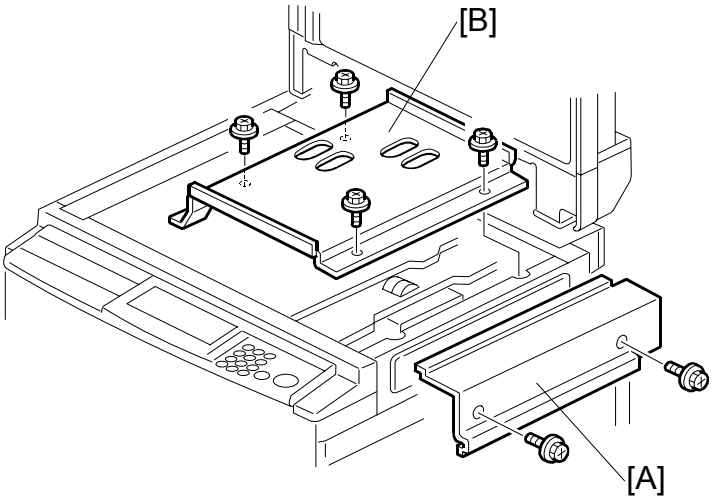

- Left scale, Upper scale, Exposure glass (☛ 3.2.4)

[A]: Right scanner cover (x 2)

[B]: Lens cover (x 4)

3.3.3 ORIGINAL SIZE SENSORS

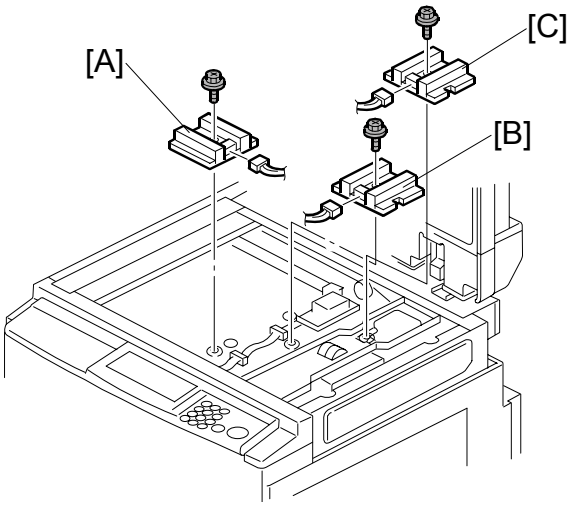

- Right scanner cover (☛ 3.2.3)
- Left scale, Upper scale, Exposure glass (☛ 3.2.4)
- Lens cover (☛ 3.3.2)

[A]: Original width sensor (🔩 x 1, ✋ x 1)
[B]: Original length sensor (🔩 x 1, ✋ x 1)
[C]: Original special size sensor (🔩 x 1, ✋ x 1)

3.3.4 LAMP STABILIZER, SBU, SCANNER DRIVE MOTOR

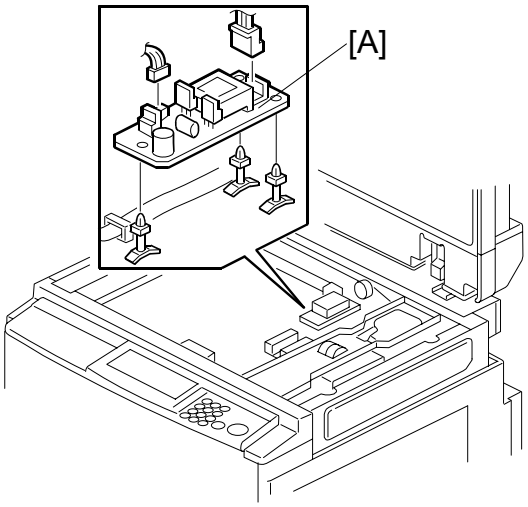

- Right scanner cover (☛ 3.2.3)
- Left scale, Upper scale, Exposure glass (☛ 3.2.4)
- Lens cover (☛ 3.3.2)

[A]: Lamp stabilizer (🖑 x 2)

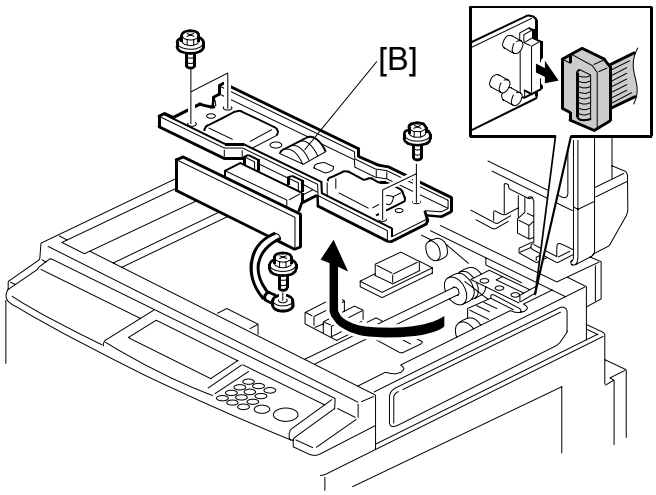

[B]: SBU/Lens block assembly (🖑 x 1, 🔩 x 5)

Do the SBU calibration if you install a new SBU (☛ 3.3.6).

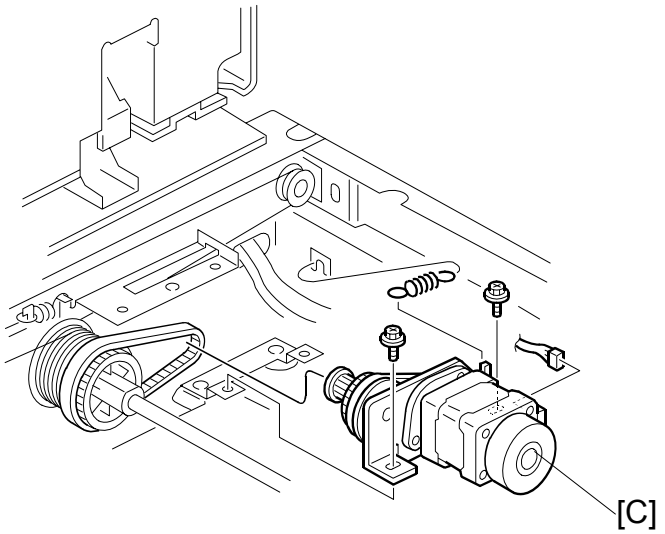

[C]: Scanner drive motor (x 1, x 2, 1 spring)

3.3.5 SCANNER WIRES

- Move the first scanner next to the opening in the frame.
- Exposure glass (☛ 3.2.4)
- Lens cover (☛ 3.3.2)
- Exposure glass bracket (☛ 3.3.1)
- Lower rear scanner frame, Upper rear scanner frame, Front scanner frame (☛ 3.3.1)

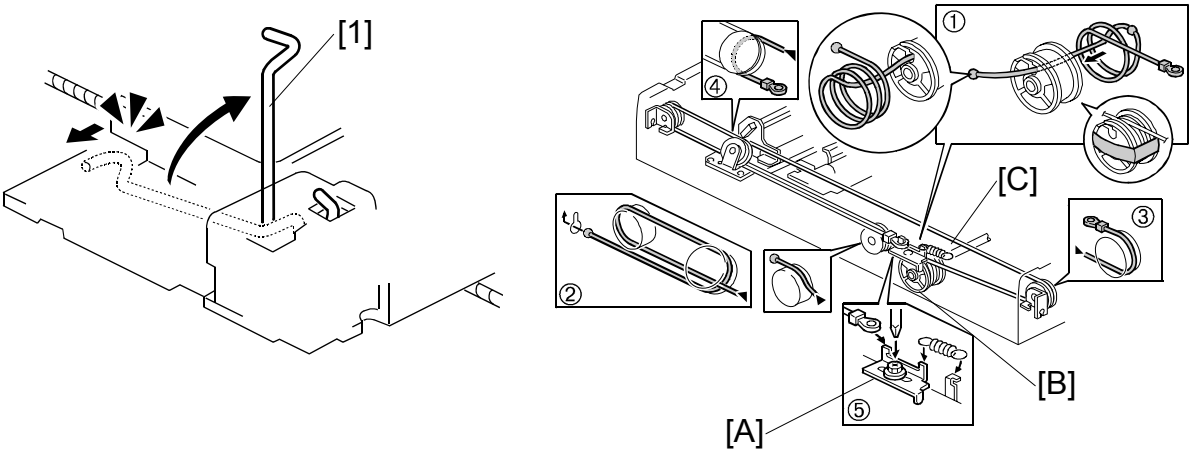

1. First scanner ([1]: 2 pins)
   NOTE: The drawings show only the front side. Repeat the procedure to remove components on the other side.

[A]: Wire tension brackets (2 springs, 🔩 x 2)
[B]: Scanner drive pulleys (2 Allen screws)
[C]: Scanner wires

Installation

1. Wrap the new scanner wire around the pulley as shown ①, then temporarily secure the pulley with tape.
2. Re-install the 1ST scanner. Then secure the first and second scanner with the scanner positioning pins (P/N A0069104), as shown in the illustration on the next page.
3. Wind the new scanner wire around the scanner drive pulley in the correct way, as shown.
4. Wind the end of the new wire with the ball as shown (②).
5. Wind the end of the new wire with the ring as shown (③, ④, and ⑤).
6. Connect the tension spring to the wire tension bracket (⑤).
7. Wind the new scanner wire for the other side as well.

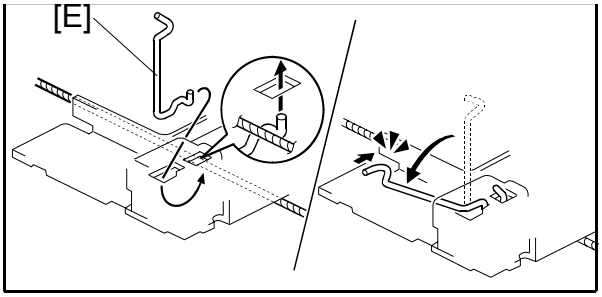

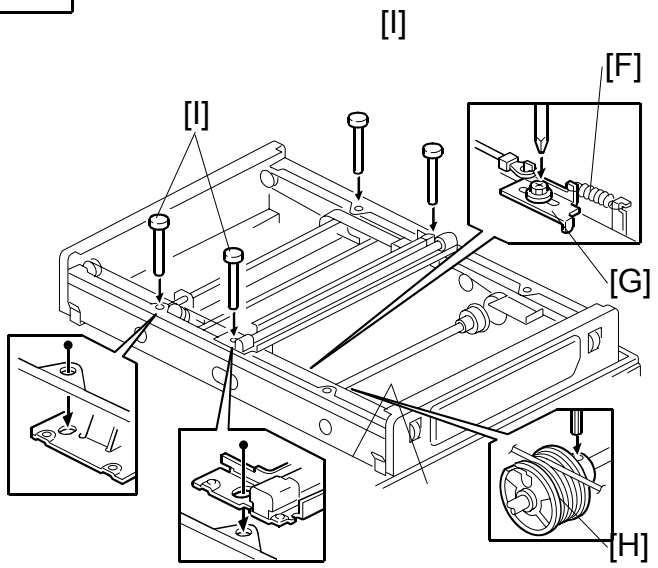

8. Secure the 1ST scanner with the pins [E].
9. Install the tension spring [F] on the tension bracket.
10. Tighten the tension bracket [G].
11. Secure the scanner drive pulley [H] (1 Allen screw).
12. Remove the scanner positioning pins [I] (P/N: A0069104).
13. Slide the scanner to the left and right several times, then set the scanner positioning pins to check the clamp position and wire tension bracket position again.

3.3.6 SBU (SENSOR BOARD UNIT) CALIBRATION

Purpose: To do the SBU auto calibration at these times:

- When the ECU is replaced (this is not necessary if you put the old RAM on the new MBU)
- When the SBU is replaced
- When the standard white plate located behind the original scale is replaced.

1. Put about 10 sheets of paper on the exposure glass.
2. Turn on the main switch and access the SP mode (Clear Modes ⇒ 1 ⇒ 0 ⇒ 7 ⇒ Clear/Stop).
3. Select SP6-005-1.
4. Push the “Run” key to start.
   NOTE: When the sequence is successful, “Completed” is shown on the display.

3.4 COPY IMAGE ADJUSTMENT

3.4.1 LEADING EDGE REGISTRATION ADJUSTMENT

Purpose: To adjust the leading edge registration on prints by changing the image scanning start positions in platen and ADF modes.

Adjustment standard:

Within -2.0 to 5.0 mm (in platen mode)

Within 0 ± 5.0 mm (in ADF mode)

CAUTION: This adjustment is required every time the ECU has been replaced.

1. Turn on the main switch, and make a copy in platen mode.
   NOTE: The image position on the trial print that is automatically made after making a master tends to be not constant. Do not use the trial print to check the copy image.
2. Measure the difference between the leading edge registration of the original and the print. If the registration does not meet specifications, go to the next step.
3. Access SP6-001-3 (Scan Start Position Adjustment - Platen Mode).
4. Adjust the gap.
5. Exit the SP mode and make a copy.
6. Re-measure the leading edge registration to ensure it is within specifications. If the registration meets specifications, go to the next step.
7. Make a copy in ADF mode and repeat the same steps using SP6-001-4 (Scan Start Position - DF Mode). The specification in ADF mode is 0 ± 5.0 mm.

NOTE: The master clamping position is adjustable using SP6-003-1 (Master Clamp Registration). Changing the clamping position with this SP also adjusts the leading edge registration. Normally, do not use this SP mode for adjusting the leading edge registration.

3.4.2 SIDE-TO-SIDE REGISTRATION ADJUSTMENT

Purpose: To adjust the side-to-side image position on prints by changing the main-scan positions in platen and ADF modes.

Adjustment standard:

Within -5.0 to 2.0 mm (in platen mode)

Within 0 ± 5.0 mm (in ADF mode)

CAUTION: This adjustment is required every time the ECU has been replaced.

1. Turn on the main switch, and make a copy in platen mode.
   NOTE: The image position on the trial print that is automatically made after making a master tends to be inconstant. Do not use the trial print to check the copy image.
2. Measure the difference between the side-to-side edge registration of the original and the print. If the registration does not meet specifications, go to the next step.
3. Access SP6-001-1 (Main-scan Position - Platen Mode).
4. Adjust the gap.
5. Exit the SP mode and make a copy.
6. Re-measure the side-to-side registration to ensure it is within specifications. If the registration meets specifications, go to the next step.
7. Make a copy in ADF mode and repeat the same steps using SP6-001-2 (Main-scan Position - DF Mode). The specification in ADF mode is 0 ± 5.0 mm.

3.4.3 VERTICAL MAGNIFICATION ADJUSTMENT

Purpose: To adjust the vertical magnification to within the adjustment standard by changing the master writing speed.

Adjustment standard: Within 100 ± 1.0%

CAUTION: This adjustment is required every time the ECU is replaced.

1. Turn on the main switch, access SP8-005-1 (TH Test Patterns), and print pattern number 6.
2. On the printout, measure the distance of 15 intervals in the sub-scan direction, as shown in the diagram.

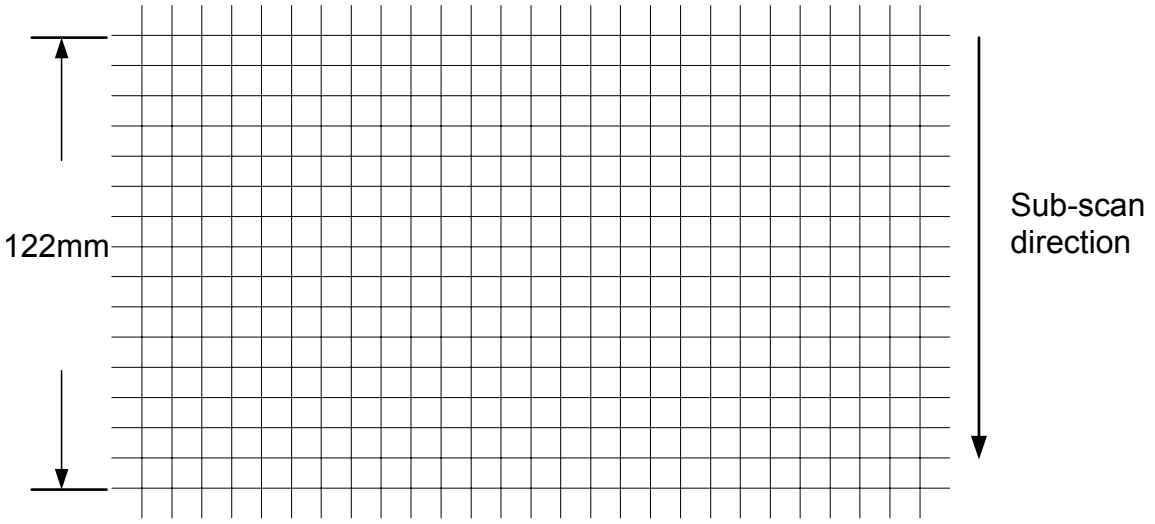

3. The distance should be 122 mm. If it is not 122 mm, calculate the necessary adjustment with the following formula.
   [(122 - measured value) / 122] x 100 = x.x %
4. Access SP6-001-7 (Master writing speed) and adjust the value (x.x %).
5. Access SP8-005-1 (TH Test Patterns) and print pattern number 6.
6. Check the distance of 15 intervals in the sub-scan direction again, to ensure it is within specifications

NOTE: The image scanning speed can be adjusted with SP6-001-5, -6 (Scanning speed). If you change the speed with this SP, the vertical magnification also changes. Normally, do not use this SP mode to adjust the vertical magnification.

3.5 BOARDS

3.5.1 ACU AND ECU, PSU OPENING PROCEDURE

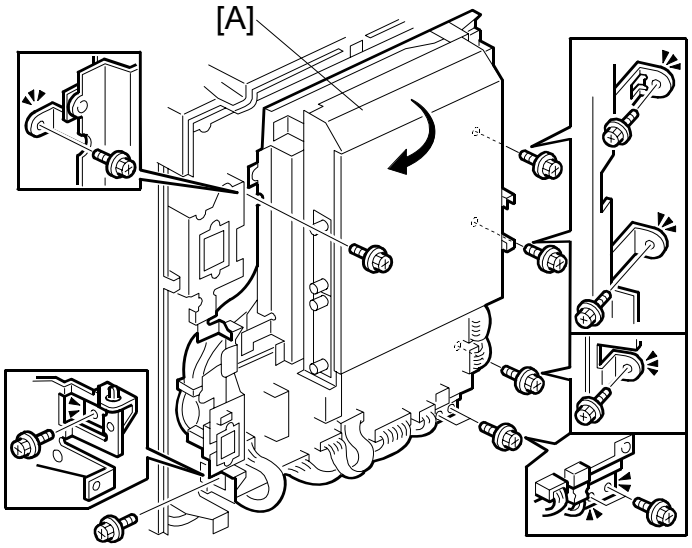

- Rear Cover (☛ 3.2.2)

[A]: Open out the ACU - ECU assembly (🔩 x 6)

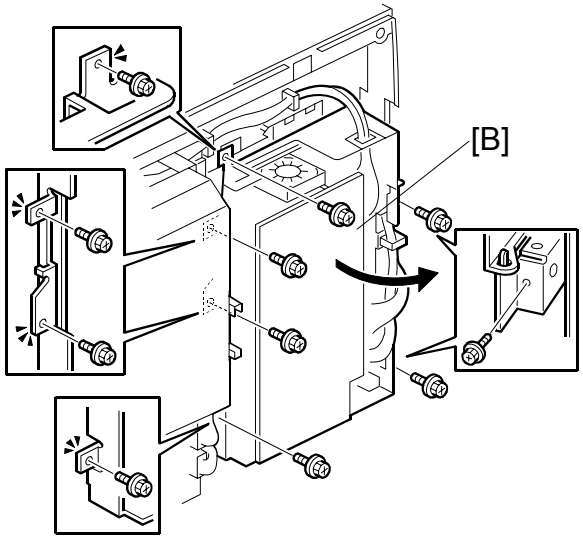

[B]: Open out the PSU (🔩 x 6)

3.5.2 ACU, ECU, I/O

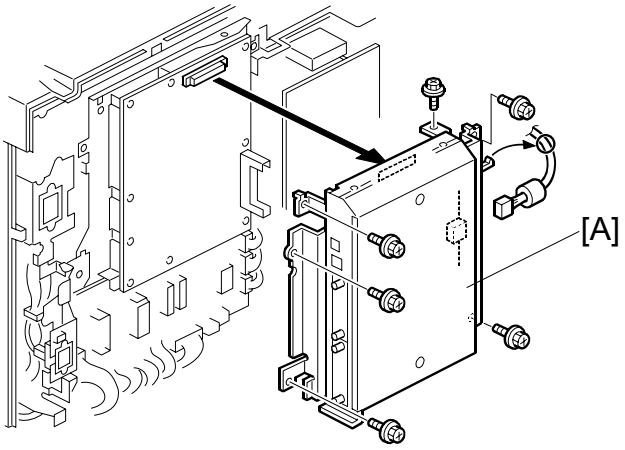

- Rear cover (☛ 3.2.2)

[A]: ACU assembly (🔩 x 6, 🖐 x 1)

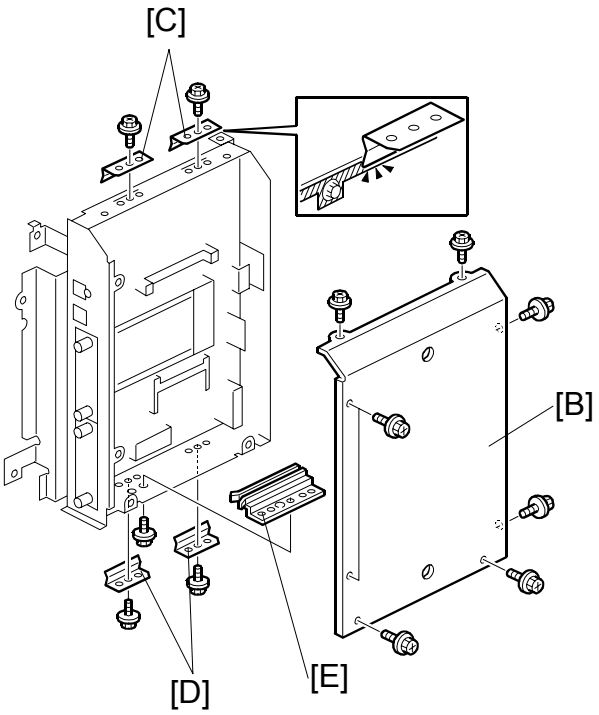

[B]: Controller cover (🔩 x 8)
[C]: Upper ground plates (🔩 x 2)
[D]: Lower ground plates (🔩 x 2)
[E]: Guide rail (🔩 x 1)

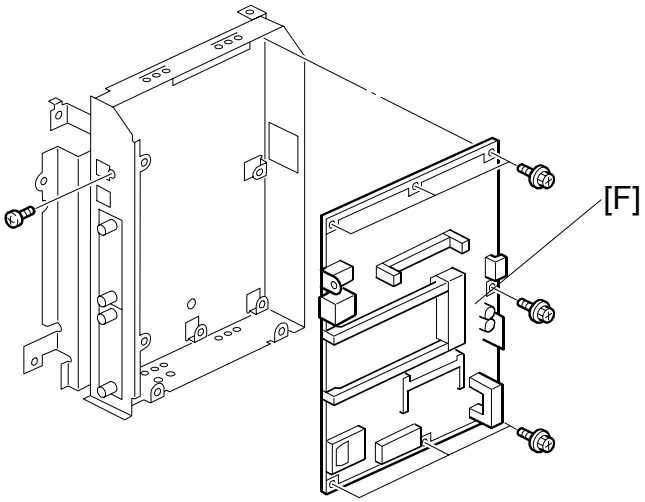

[F]: ACU (x 7)

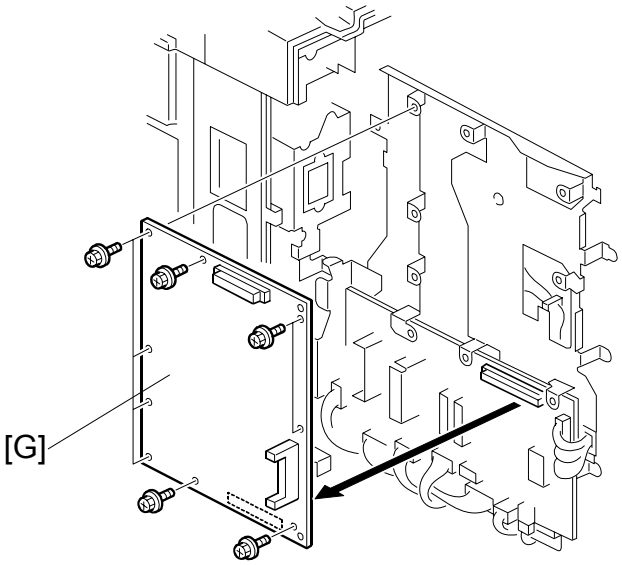

[G]: ECU (x 9, x 11)

CAUTION: After you install the new ECU, do these adjustments:

- SBU Calibration (☛ 3.3.6)
- Copy Image Adjustments (☛ 3.4)
- Also see ECU and I/O Board Replacement (☛ 3.5.5)

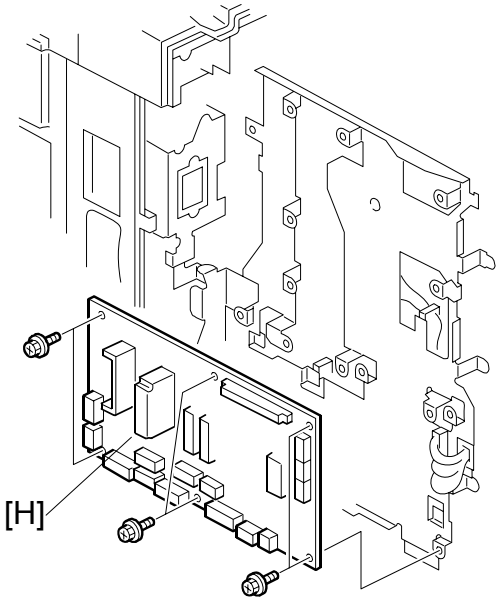

[H]: I/O (x 6, x 16)

3.5.3 PSU

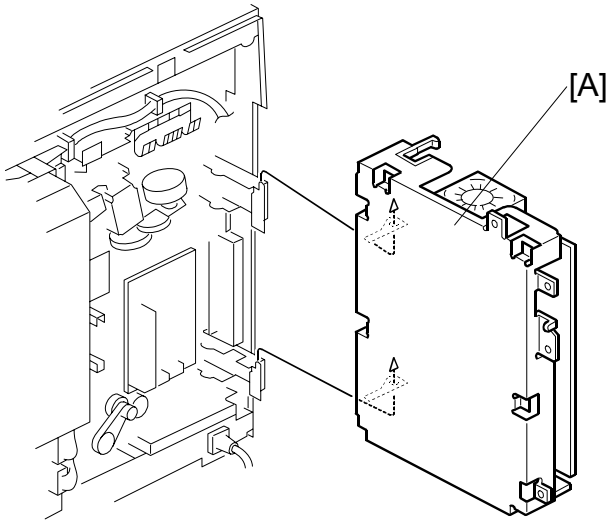

- Rear Cover (☛ 3.2.2)

[A]: PSU (x 6 , x 11)

CAUTION: Do the thermal head voltage adjustment (☛ 3.7.15) after you install the new PSU.

3.5.4 DOUBLE FEED DETECTOR BOARD

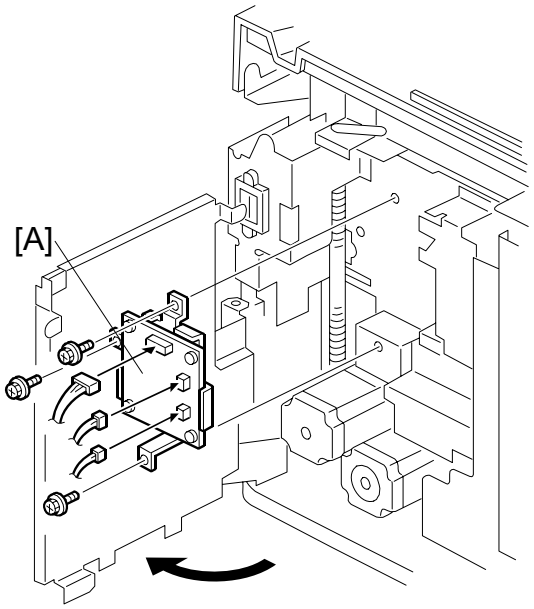

- Rear cover (☛ 3.2.2)
- ECU (☛ 3.5.1)

[A]: Double feed detector board (🔩 x 3, 🖐 x 3)

3.5.5 ECU AND I/O REPLACEMENT, NVRAMS

SP mode data and other adjustment data are stored in the backup RAM on the ECU. There are adjustable potentiometers on the I/O.

Therefore, after the ECU and/or I/O are replaced, the following adjustments are needed.

- After the ECU is replaced -

- The SP mode data returns to the default. Save the data SP mode in order to restore it later. If possible, print out all system parameter lists with SP8-001-1 to SP8-001-15.
- Do all the copy image adjustments. (☛ 3.4)
- Sensor board unit calibration. (☛ 3.3.6)
- Master end sensor adjustment. (☛ 3.7.15)

NOTE: If you use the backup RAM [A] (IC38) from the old ECU on the new one, all data, including data in the SP modes, will be restored. You do not have to do the above procedures. (The battery inside the RAM preserves the data if the RAM is removed from the ECU.)

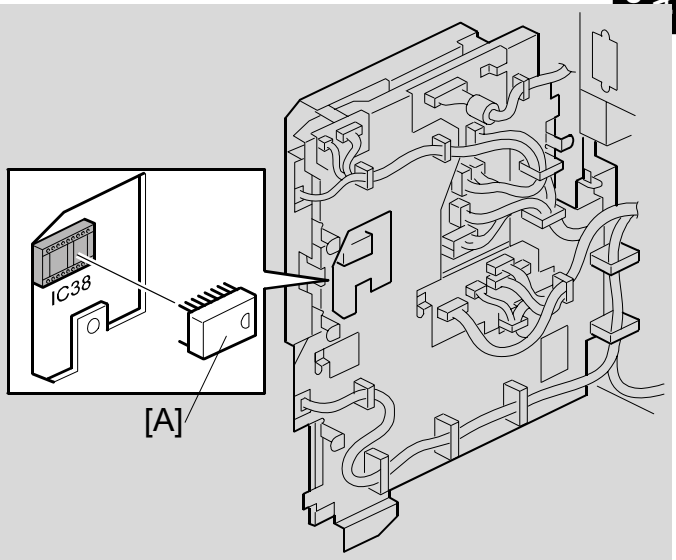

- After the I/O board is replaced -

- Carry out the adjustments for the 1st drum master, 2nd drum master, master eject, master set sensor and master edge sensors.

- When both the ECU and I/O board are replaced -

- Do all of the above adjustments. (The adjustments listed for the ECU are not necessary if you put the old RAM on the new ECU.)

- After a new NVRAM is installed on the ACU or ECU-

See section 5.5.

3.6 MASTER EJECT SECTION

3.6.1 MASTER EJECT BOX

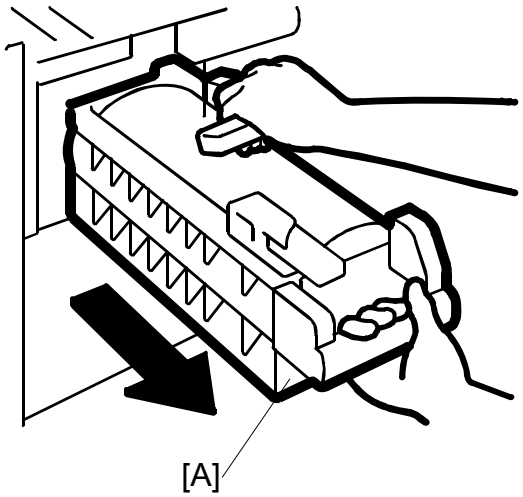

- First, open the front cover.

[A]: Master eject box

3.6.2 MASTER EJECT ROLLER UNIT, MASTER EJECT SENSOR

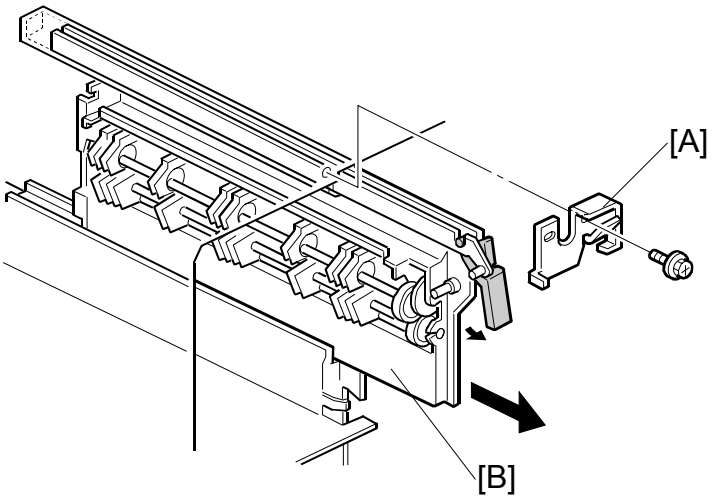

- First, open the front cover.

[A]: Supporter (x 1)
[B]: Master eject roller unit

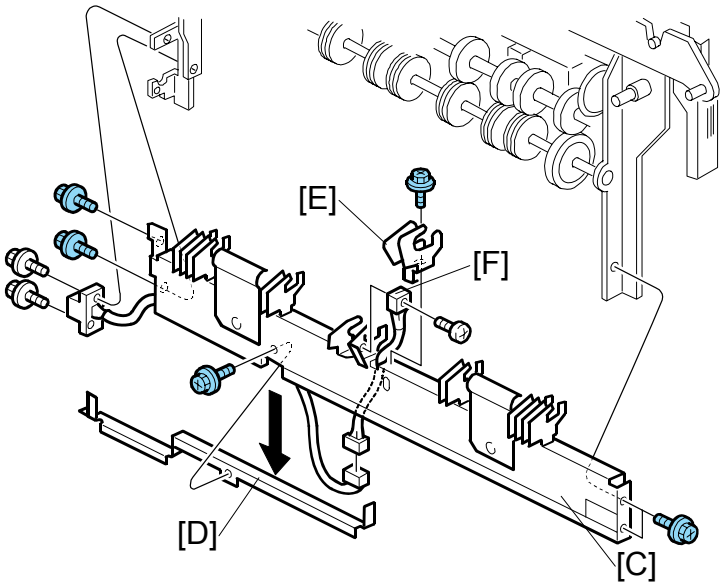

[C]: Lower master eject roller unit (x 6)
[D]: Master eject sensor cover (x 1)
[E]: Master eject sensor bracket (x 1)
[F]: Master eject sensor (x 1, x 1)

NOTE: Do the master eject sensor adjustment (☛ 3.6.5) after you install the new master eject sensor.

3.6.3 MASTER EJECT DRIVE UNIT, SENSORS AND MOTORS

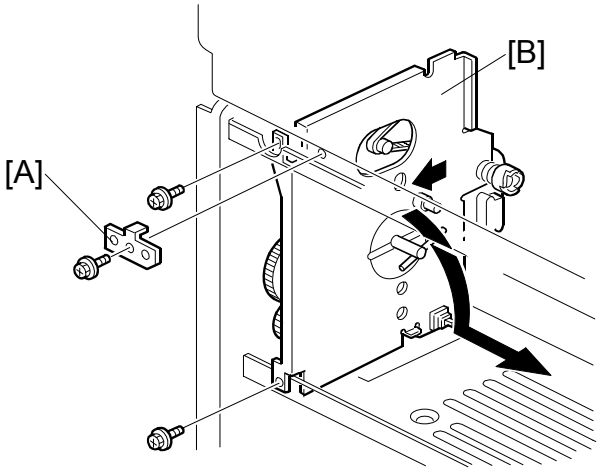

- Rear Cover (☛ 3.2.2)
- PSU (☛ 3.5.1)
- Left scanner cover (☛ 3.2.3)
- Master eject box (☛ 3.6.1)
- Master eject roller unit (☛ 3.6.2)

[A]: Bracket (x 1)
[B]: Master eject drive unit (x 2, x 4)

NOTE: 1) To remove the master eject drive unit [B], slide it out towards the paper delivery direction, and pull down the top of the unit towards the operation panel. (See the arrows in the illustration.)
2) The master eject drive unit is connected to the cables from the sensor and the motor. Remove the master eject drive unit carefully.

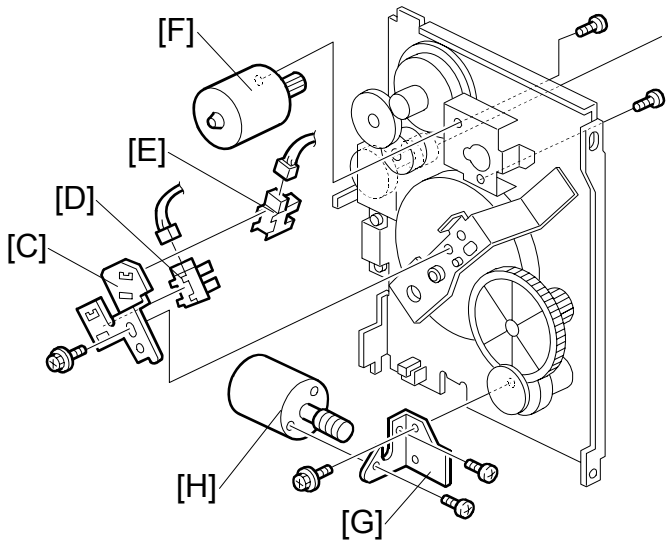

[C]: Sensor bracket (x 1)
[D]: Pressure plate HP sensor (x 1)
[E]: Pressure plate limit position sensor (x 1)
[F]: Master eject motor (x 2, x 1)
[G]: Pressure plate motor bracket (x 2)
[H]: Pressure plate motor (x 2, x 1)

3.6.4 MASTER EJECT BOX LOCK SOLENOID

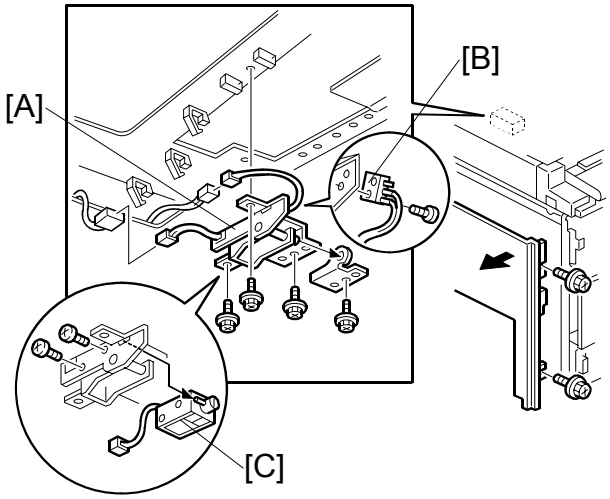

- Left cover (☛ 3.2.2)
- Master eject box (☛ 3.6.1)

[A]: Master eject box lock solenoid bracket (x 4, x 2)
[B]: Master eject box lock sensor (x 1)
[C]: Master eject box lock solenoid (x 2)

3.6.5 MASTER EJECT SENSOR ADJUSTMENT

Purpose: To ensure that the sensor detects the ejected master properly.

Standard: 1.5 volts (within “+0.1” and “-0.1” volts)

CAUTION: 1) The sensor adjustment is required in the following cases:
-When the sensor is replaced.
-When the I/O board is replaced.
2) While adjusting, make sure to attach all exterior covers to avoid external light.
3) Do not turn the VRs excessively.
4) If the sensor is dirty, clean or replace it.
5) For how to access SP mode, refer to the Service Program Mode section. (☛ 5.4.1)

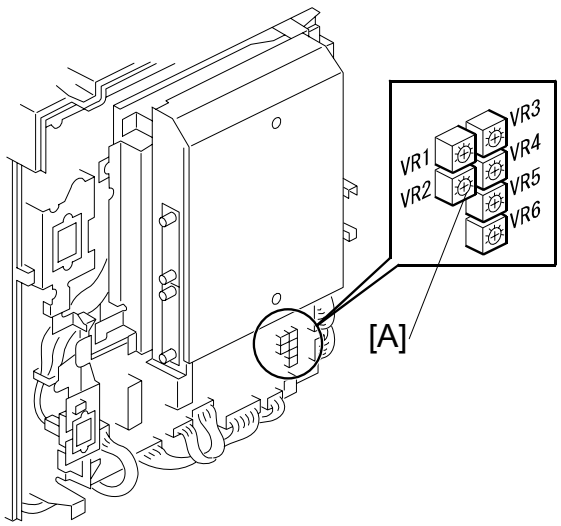

1. Rear cover (☛ 3.2.2)
   NOTE: Make sure that the master eject box and drum are installed.
1. Turn on the main switch, then access SP6-4-1 (Master Eject Sensor).
2. The sensor input voltage is displayed on the operation panel. Turn VR2 [A] on the I/O board until the value is between 1.4 and 1.6 volts.
3. Leave the SP mode.

3.6.6 REASSEMBLING THE MASTER PICK-UP ROLLER DRIVE GEARS

Purpose: When the master pick-up roller drive sector gear [A] or master eject clamper drive arm [B] have been removed, they must be re-installed in the correct position.

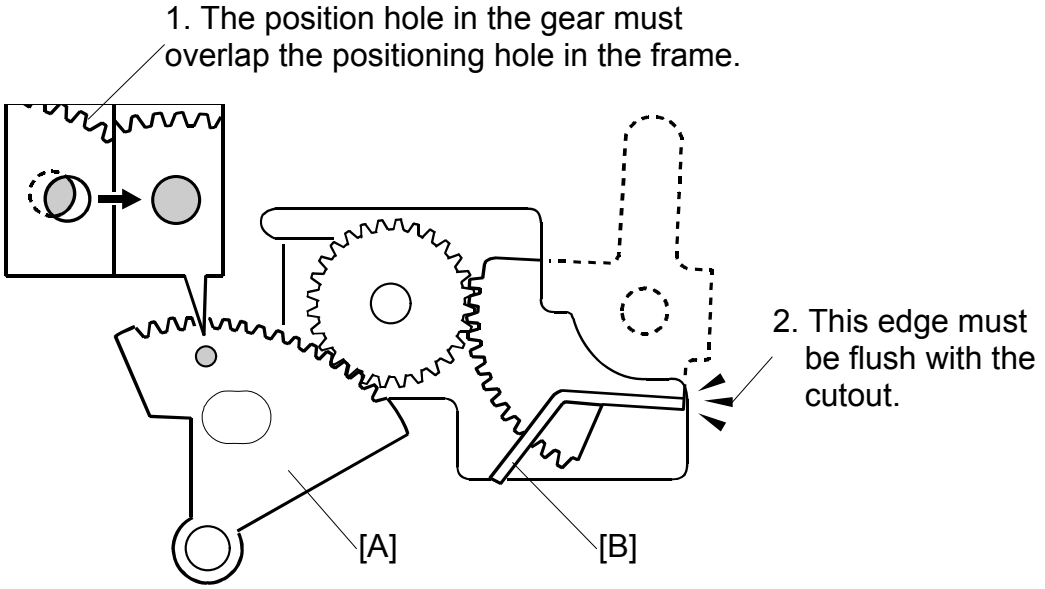

1. The master eject clamper drive arm [B] must be flush with the cutout in the frame, as shown.
2. While you hold the arm in the above position, install the sector gear [A]. The small positioning hole in the sector gear must exactly overlap the positioning hole in the frame, as shown.

3.7 MASTER FEED SECTION

3.7.1 MASTER MAKING UNIT

CAUTION: When you remove the master making unit from the main frame, make sure to disconnect the two connectors [A].

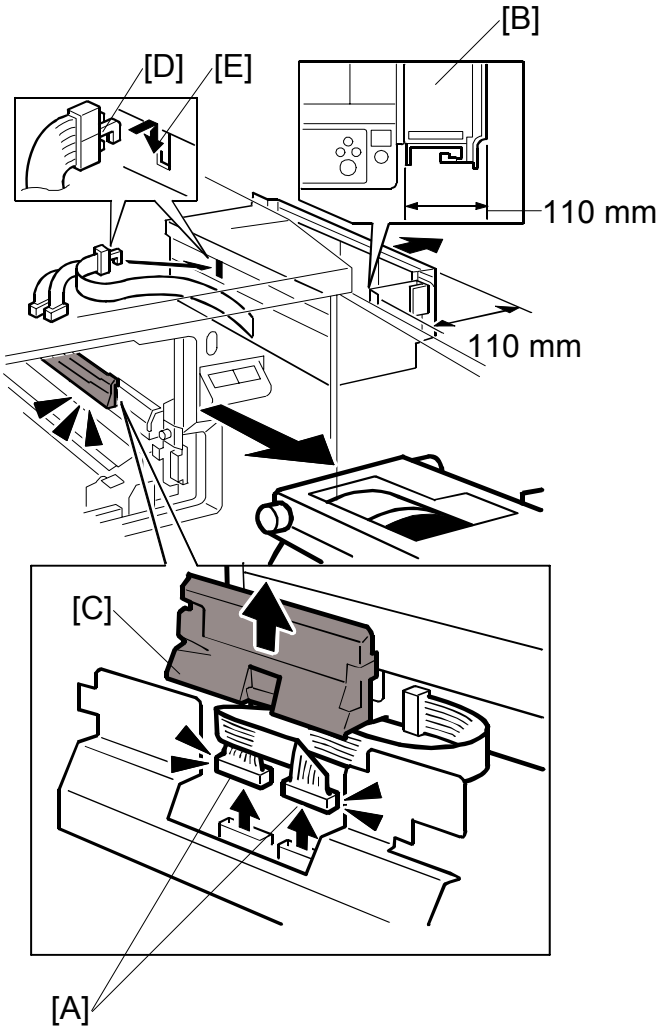

- Drum unit (☛ 3.8.1)

1. Pull out the master making unit [B]. Make sure that the distance between the main frame and the edge of the master making unit is 110 mm or less. If you pull the unit out more than 110 mm, you cannot do step 4.
2. Remove the connector cover [C].
3. Remove the two connectors [A].
4. Check that the hook on the flat cable [D] is attached to notch [E] in the master feed control roller bracket.
   NOTE: This hook must always be attached when you install the master making unit, to prevent damage to the cable.

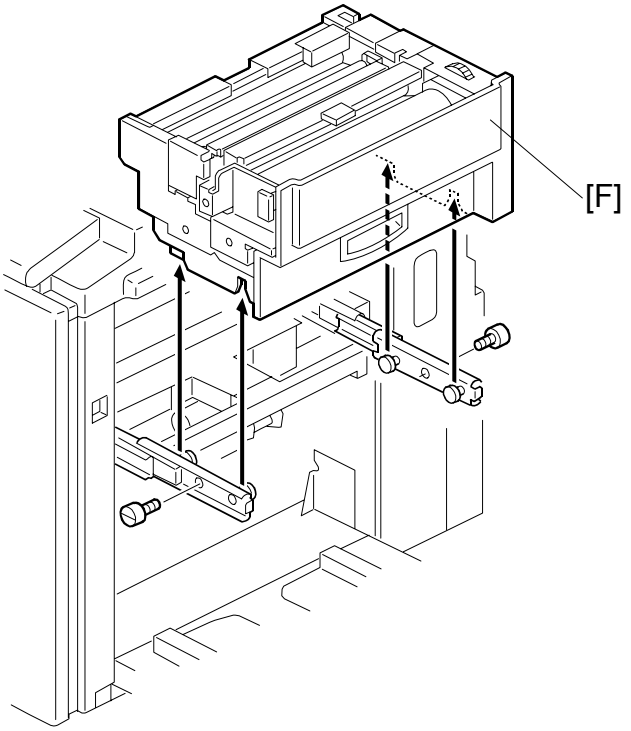

5. Remove the master making unit [F] (☞ x 2).

CAUTION: When you install the master making unit, make sure to attach the two connectors [A].

3.7.2 MASTER SET ROLLER, PLATEN ROLLER, UPPER TENSION ROLLER

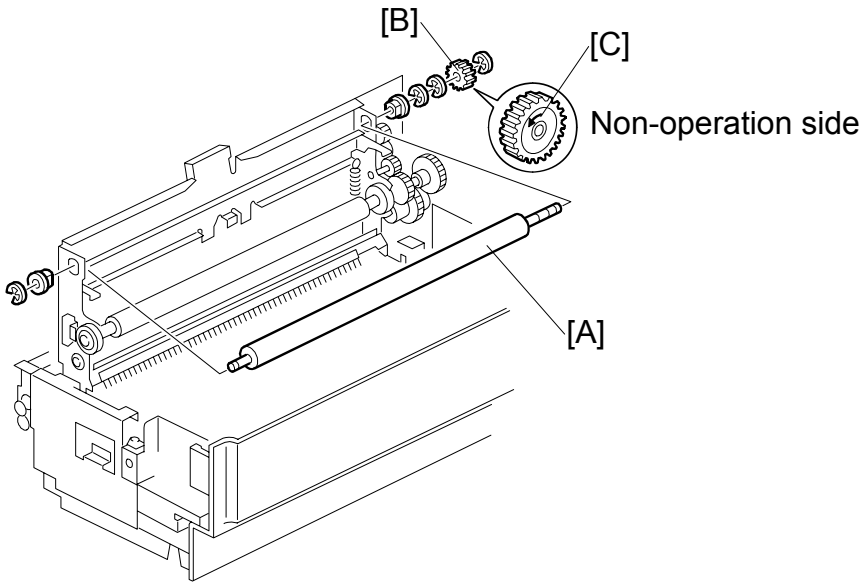

- Master making unit (☛ 3.7.1)

[A]: Master set roller (ℂ x 4)

NOTE: When you install the one-way clutch [B], position the one-way clutch and marking [C] as shown in the diagram.

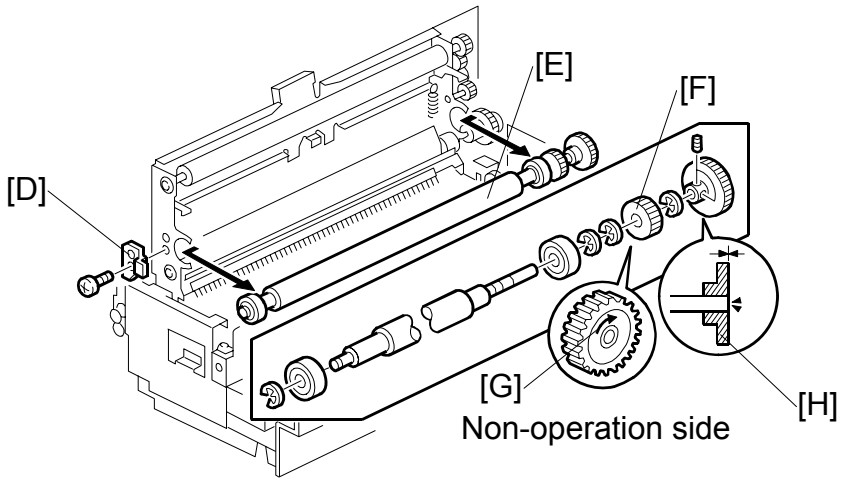

[D]: Platen roller bracket (🔩 x 1)

[E]: Platen roller (Hexagon bolt x 2, ℂ x 4)

NOTE: 1) When you install the one-way clutch [F], position the one-way clutch and marking [G] as shown in the diagram.

2) Make sure that the end of the platen roller shaft is flush with the edge of the pulley [H].

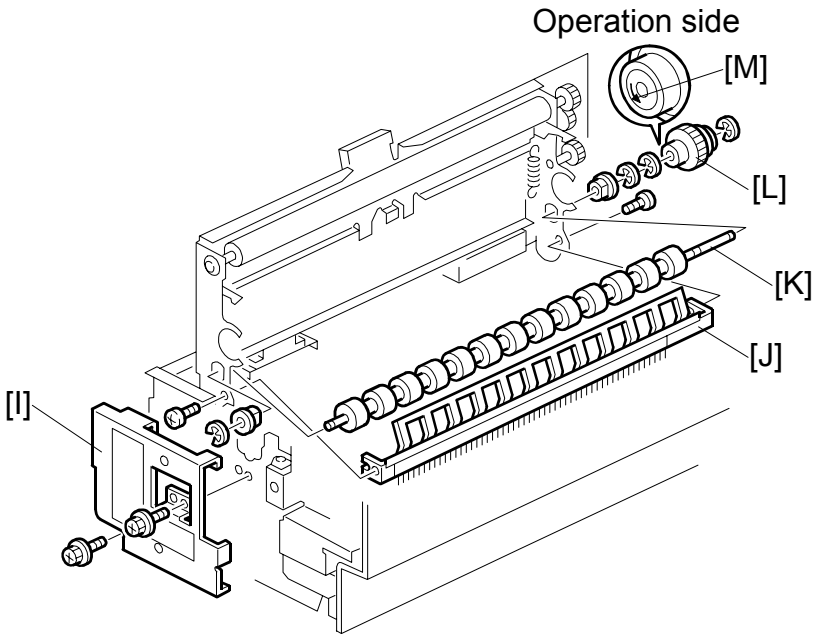

[I]: Front bracket (☞ x 2)
[J]: Tension roller guide (☞ x 3)
[K]: Upper tension roller (ℂ x 4)

NOTE: When you install the one-way clutch [L], position the one-way clutch and marking [M] as shown in the diagram.

3.7.3 THERMAL HEAD

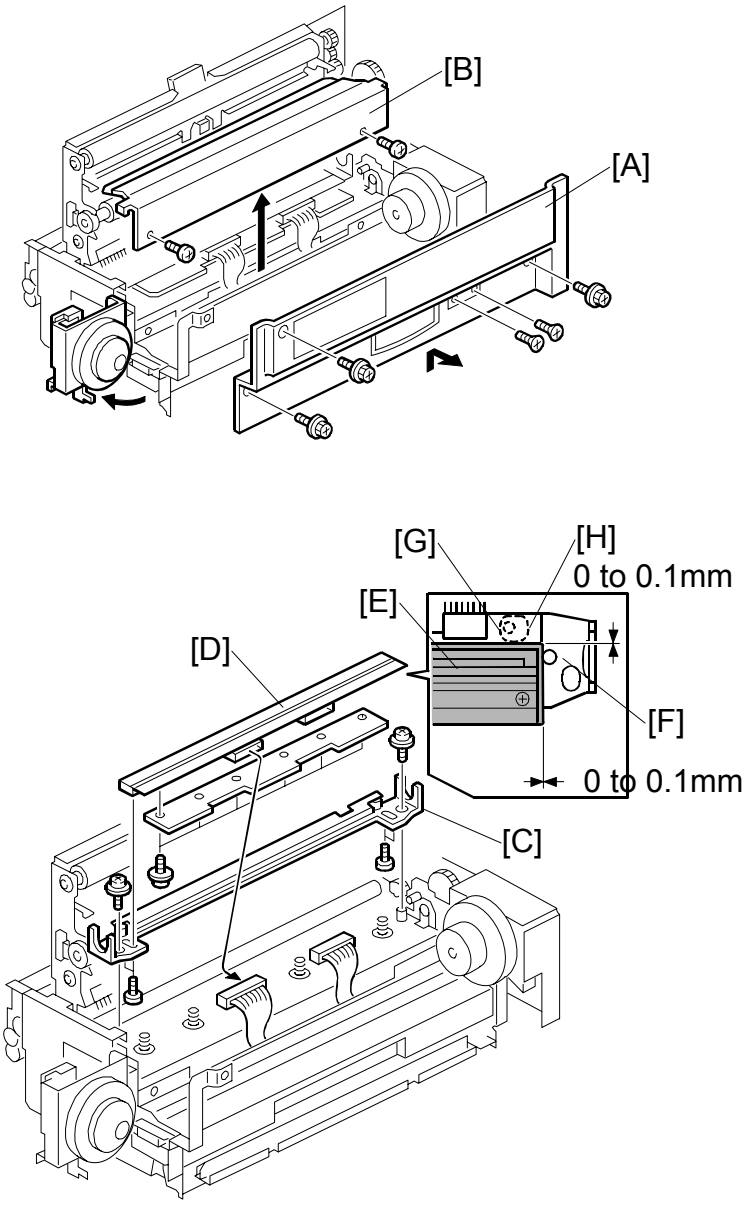

- Master making unit (☛ 3.7.1)

[A]: Master making unit right cover (☞ x 5)
[B]: Thermal head cover (☞ x 2)
[C]: Thermal head base (☞ x 2, 🖑 x 2)
[D]: Thermal head (☞ x 10)

CAUTION: 1) When you re-install the thermal head, make sure that these distances are 0 to 0.1 mm
a) At the right edge of the thermal head: The distance between the thermal head [E] and the projection [F]
b) At the left and right edges of the thermal head: The distance between the thermal head [E] and the thermal head guide plate [G].
c) At the left and right edges of the thermal head: The distance between the thermal head [E] and the eccentric bushing [H].
2) After the replacement, adjust the thermal head voltage (☛ 3.7.15).
3) Make sure that there is no foreign material on the thermal head surface (especially on the heating elements).
4) Don't touch the surface with bare hands. (If you touch it, clean the surface with alcohol.)
5) Also, do not touch the surface of the master film with bare hands.
6) Connect and disconnect the connectors carefully.
Keep them horizontal. Also, make sure that they are reconnected firmly.
7) Don't touch the terminals of the connectors with bare hands.

3.7.4 DUCT ENTRANCE SOLENOID

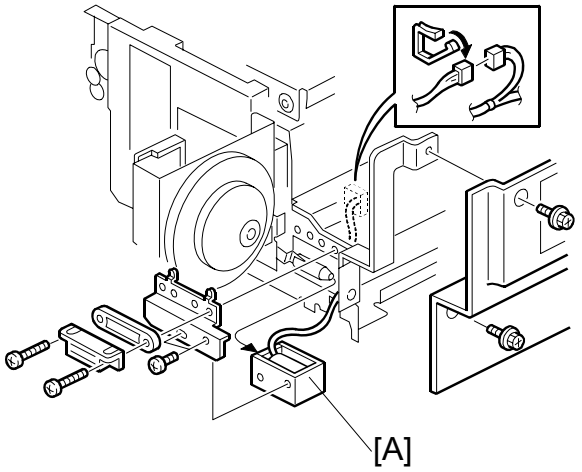

- Master making unit (☛ 3.7.1)
- Master making unit right cover (☛ 3.7.3)

[A]: Duct entrance solenoid (🔩 x 4, 🖐 x 1)

3.7.5 CUTTER UNIT, MASTER FEED CONTROL MOTOR, CLAMP TENSION ROLLER, UPPER MASTER FEED CONTROL ROLLER

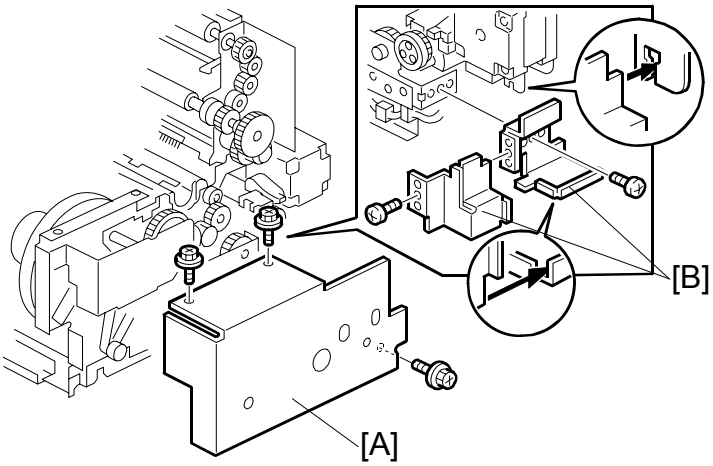

- Master making unit (☛ 3.7.1)

[A]: Master making unit rear cover (🔩 x 3)
[B]: Harness covers (🔩 x 2)

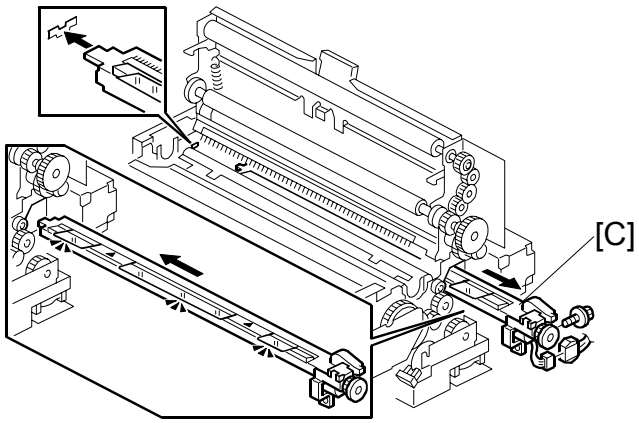

[C]: Cutter unit (🔩 x 1, 🖐 x 1)

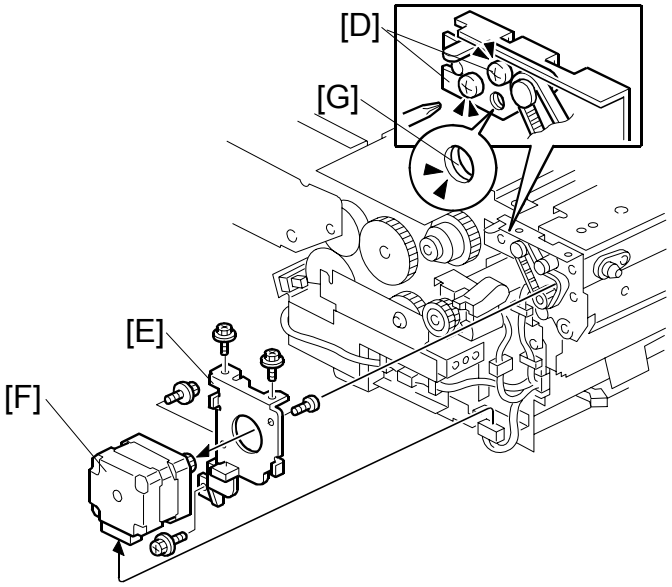

[D]: Loosen the screws that secure the tension bracket.
[E]: Master feed control motor bracket (x 3, x 1)
[F]: Master feed control motor (x 2)

NOTE: When you tighten the screws to secure the tension bracket [D], make sure that the small holes in the rear frame are in line with the small hole in the tension bracket [G], as shown.

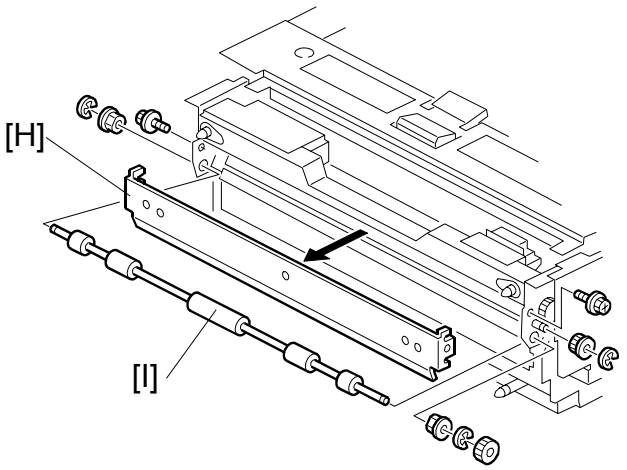

[H]: Master feed control roller bracket (x 2)
[I]: Clamp tension roller (x 3)

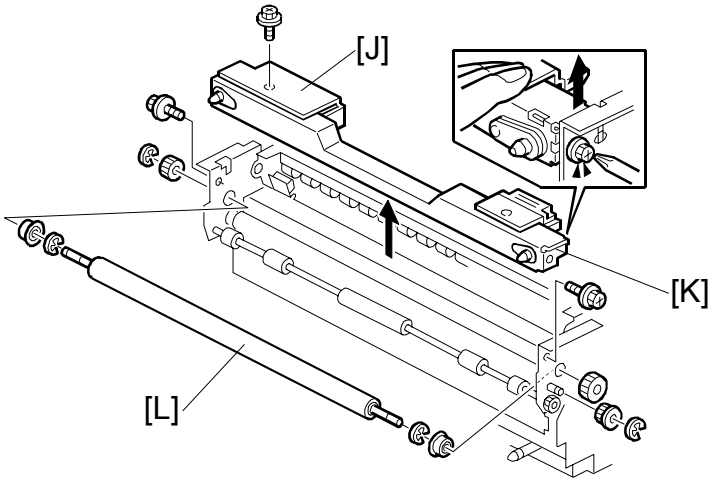

[J]: Master edge sensor cover (☞ x 1)
[K]: Master making unit frame (☞ x 2)
[L]: Upper master feed control roller (ℂ x 4)

3.7.6 PLATEN RELEASE SENSOR, PLATEN RELEASE MOTOR

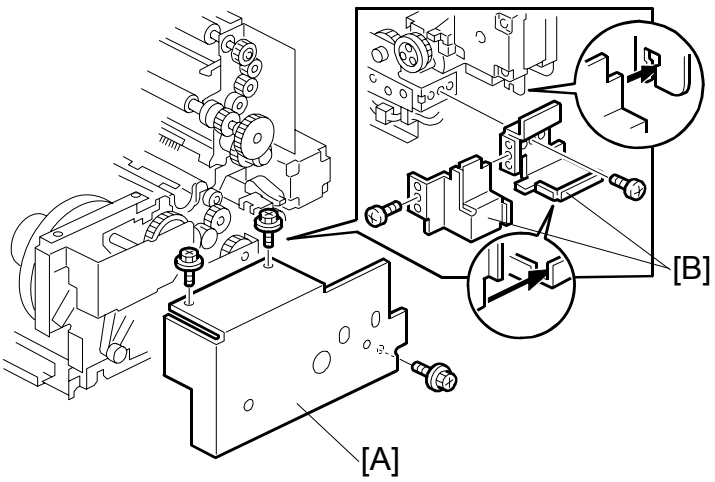

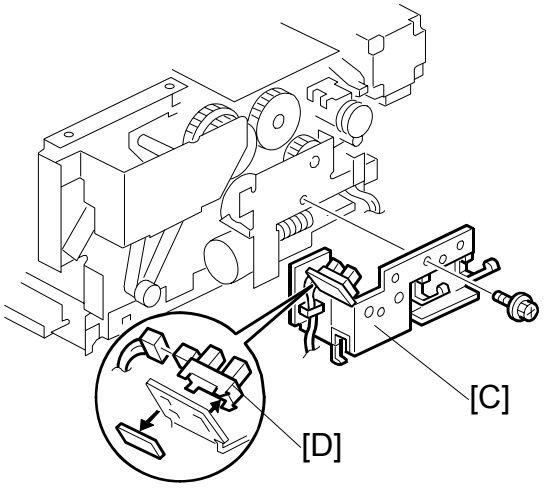

- Master making unit (☛ 3.7.1)
- Master making unit right cover (☛ 3.7.3)

[A]: Master making unit rear cover (☞ x 3)
[B]: Harness covers (☞ x 2)
[C]: Cover bracket (☞ x 1)
[D]: Platen release sensor (☞ x 1)

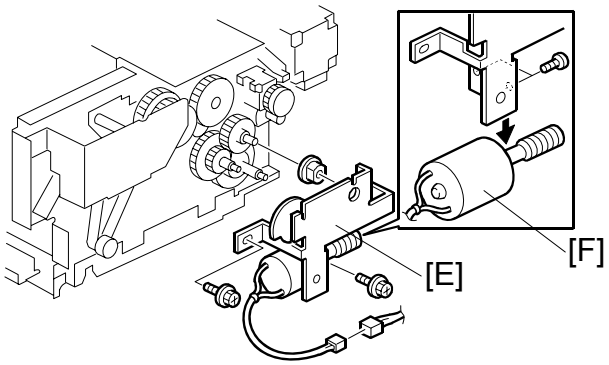

[E]: Platen release motor bracket (🔩 x 2, ✋ x 1)
[F]: Platen release motor (🔩 x 2)

NOTE: When you install the platen release motor bracket, make sure that the gear is positioned correctly (Platen Release Cam Adjustment: ☛ 3.7.14).

3.7.7 MASTER AMOUNT SENSOR

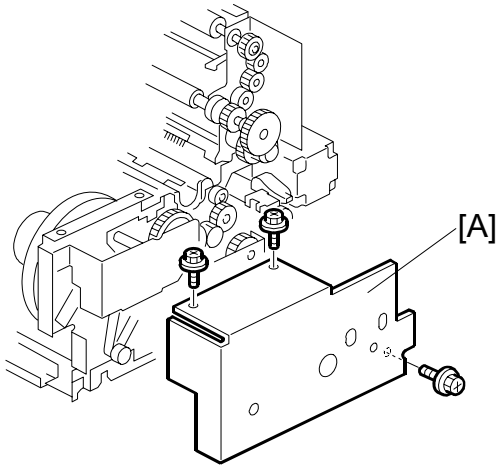

- Master making unit (☛ 3.7.1)
- Master making unit right cover (☛ 3.7.3)

[A]: Master making unit rear cover (☞ x 3)

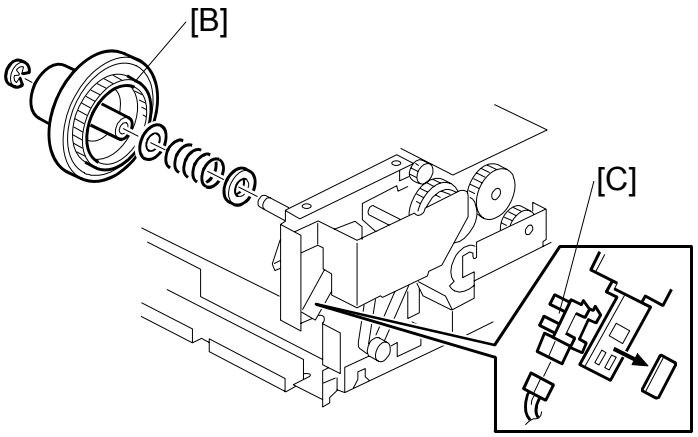

[B]: Rear master flange (ℂ x 1)
[C]: Master amount sensor (☜ x 1)

3.7.8 MASTER DUCT SENSOR, MASTER SUCTION FANS, MASTER FEED MOTOR

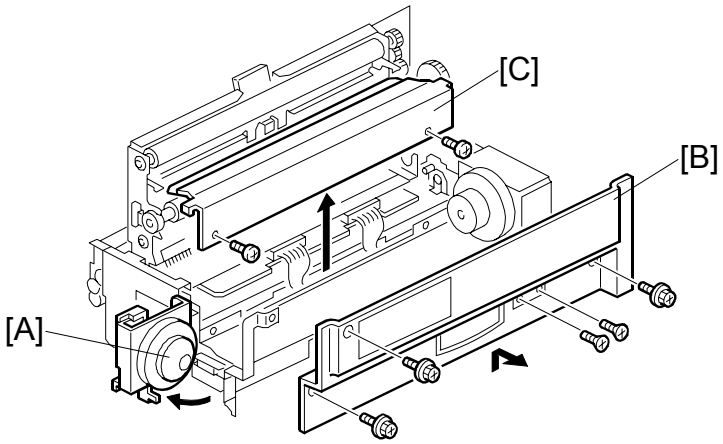

- Master making unit (☛ 3.7.1)

1. Open the master tray cover [A].

[B]: Master making unit right cover (🖉 x 5)
[C]: Thermal head cover (🖉 x 2)

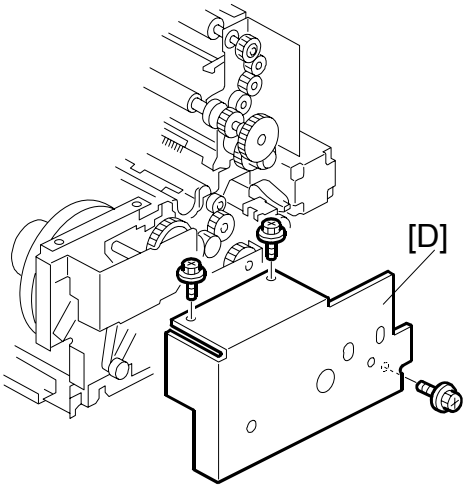

[D]: Master making unit rear cover (🖉 x 3)

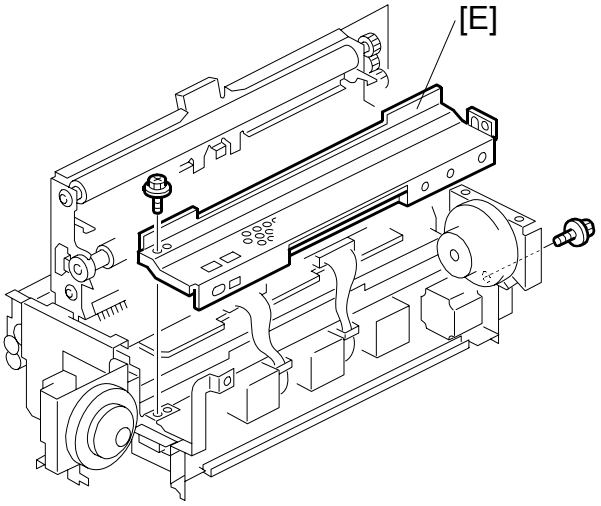

[E]: Lower master cover (x 2)

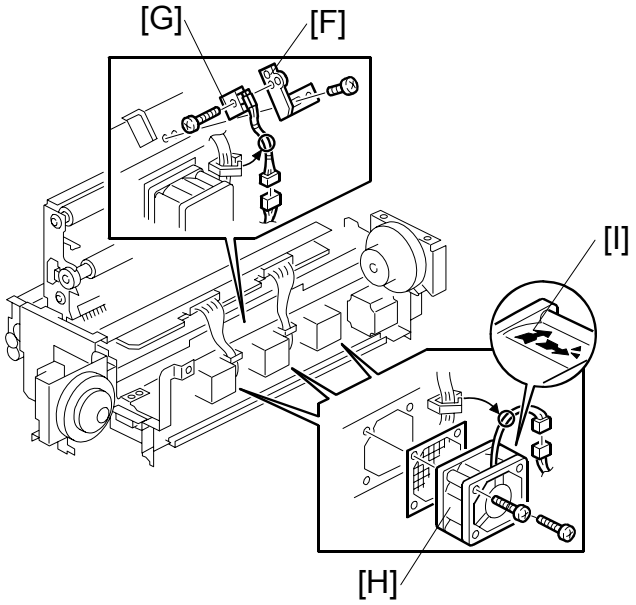

[F]: Master duct sensor bracket (x 1, x 1)
[G]: Master duct sensor (x 1)
[H]: Master suction fans (x 2, x 1)

NOTE: When you install the master suction fans, position the cable and marking [I] as shown in the diagram.

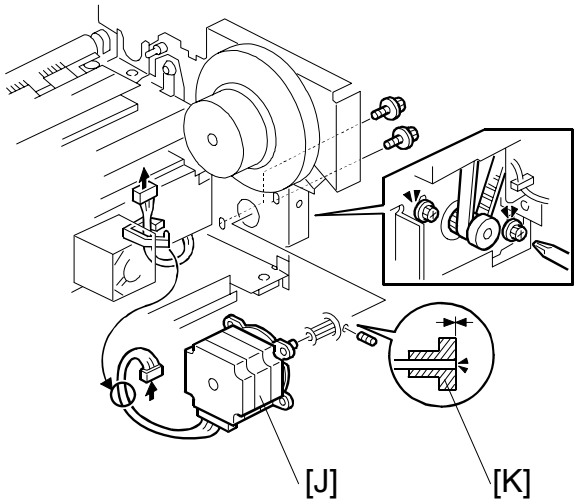

[J]: Master feed motor (x 2, x 1)
NOTE: Make sure that the end of the master feed motor shaft is flush with the edge of the pulley [K].

3.7.9 MASTER SET SENSOR, MASTER EDGE SENSOR

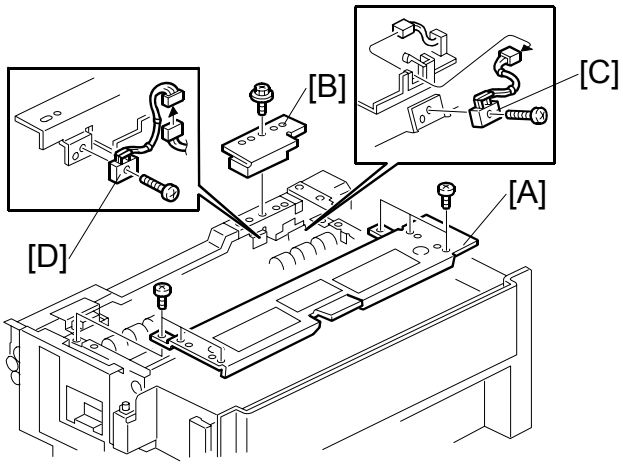

- Master making unit (☛ 3.7.1)

[A]: Master set cover (x 6)
[B]: Master edge sensor cover (x 1)
[C]: Master set sensor (x 1, x 1)
NOTE: Do the master set sensor adjustment (☛ 3.7.18) after you install the new master set sensor.
[D]: Master edge sensor (x 1, x 1)
NOTE: Do the master edge sensor adjustment (☛ 3.7.17) after you install the new master edge sensor.

3.7.10 FLAT CABLE

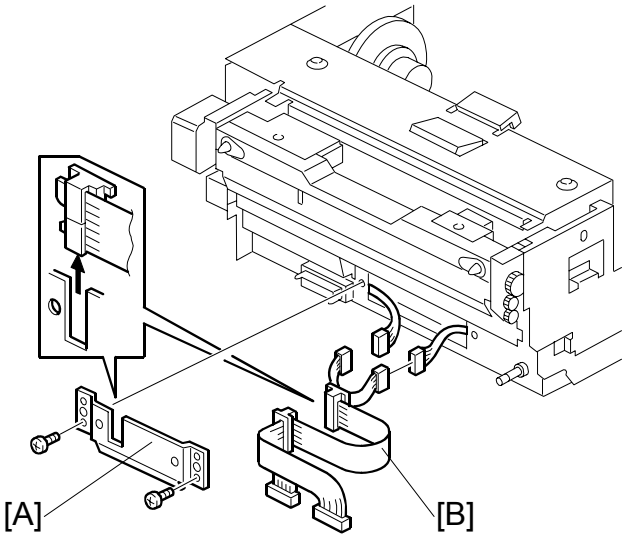

- Master making unit (☛ 3.7.1)

[A]: Cable cover (🔩 x 2)
[B]: Flat cable (🖐 x 2)

3.7.11 MASTER END SENSOR

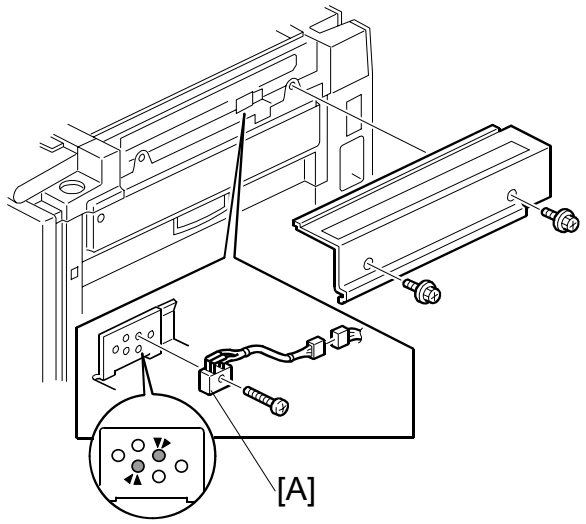

- Right scanner cover (☛ 3.2.3)

[A]: Master end sensor (🔩 x 1, 🖐 x 1)

3.7.12 MASTER BUFFER FANS

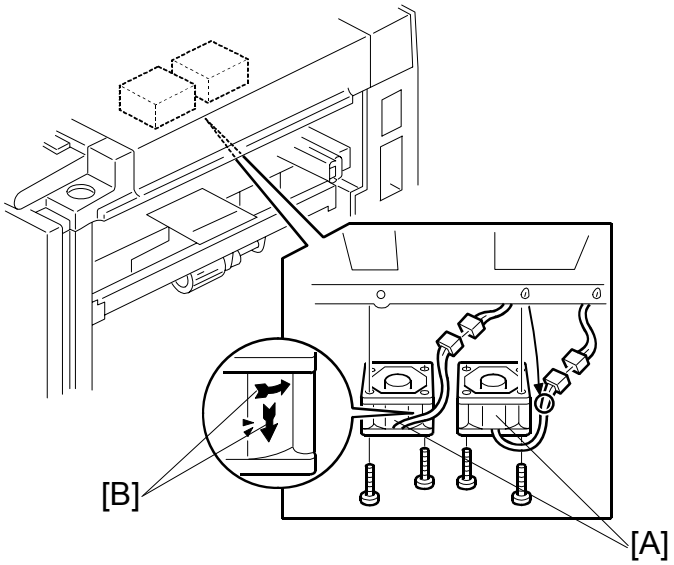

- Master making unit (☛ 3.7.1)

[A]: Master buffer fans (🔩 x 2, 🔌 x 1 each)

NOTE: When you install the fans, position the cable and marking [B] as shown in the diagram.

3.7.13 UNIT LOCK SOLENOID, 2ND DRUM MASTER SENSOR

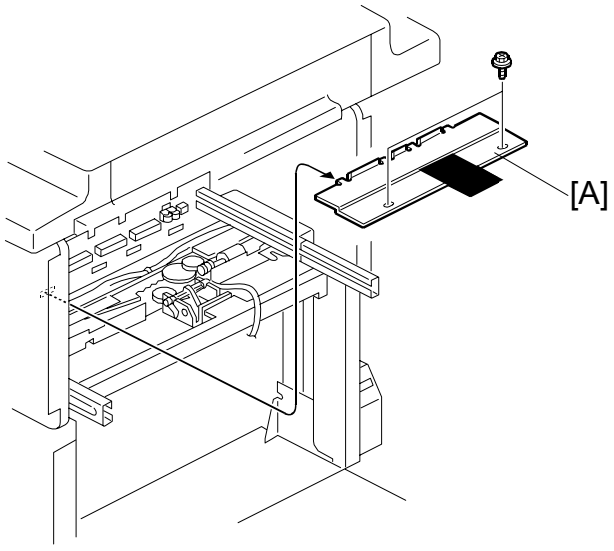

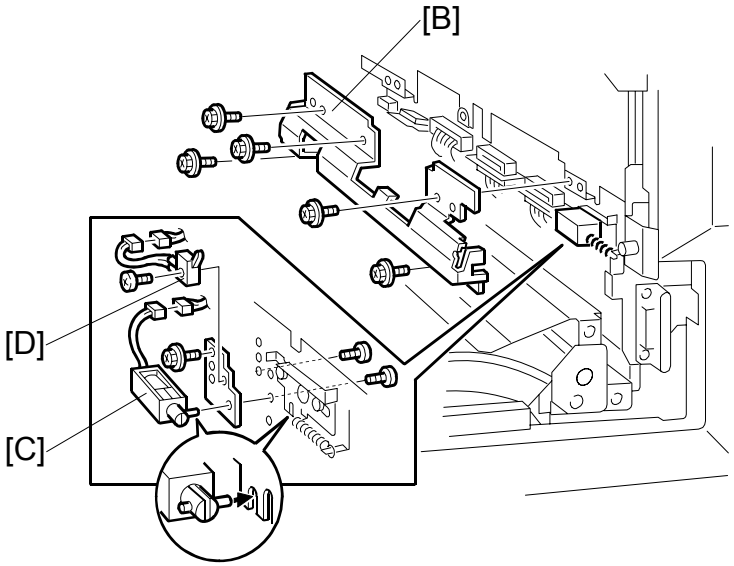

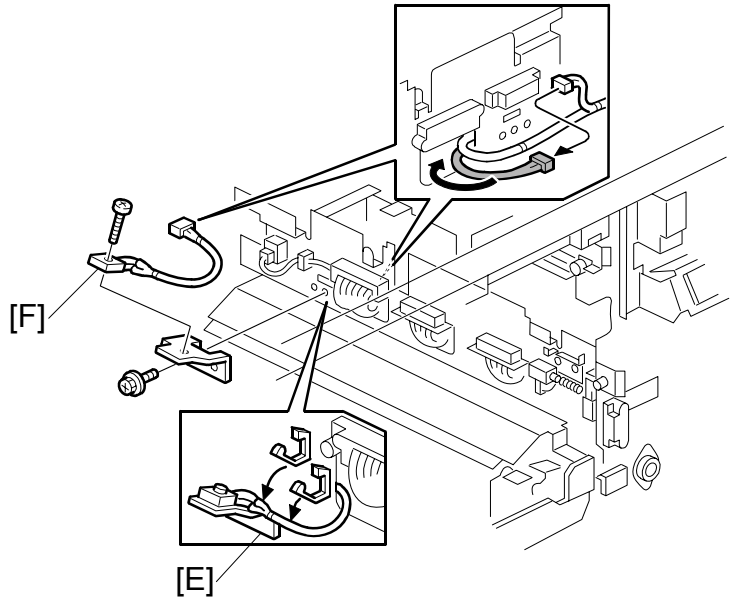

- Master making unit (☛ 3.7.1)
- Drum unit (☛ 3.8.1)

[A]: Feed cover (x 2)
[B]: Sensor bracket (x 5)
[C]: Master making unit lock solenoid (x 2, x 1)
[D]: Master making unit lock detector (x 1, x 1)
[E]: 2nd drum master sensor bracket (x 1, x 1)
[F]: 2nd drum master sensor (x 1)

NOTE: Do the 2nd drum master sensor adjustment (☛ 3.8.10) after installing the new 2nd drum master sensor.

3.7.14 PLATEN RELEASE CAM ADJUSTMENT

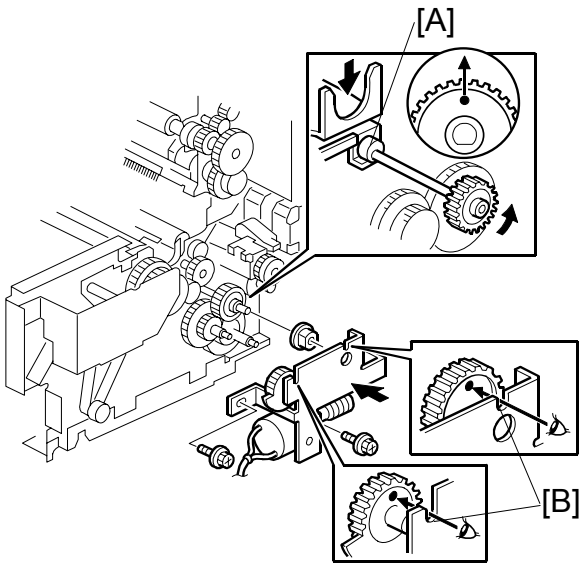

Purpose: After the platen release mechanism is disassembled, the platen release cam [A] must be reinstalled in the correct position.

Procedure: When you tighten the screws to secure the mechanism, make sure that the small holes in the gears [B] are in line with the cutouts in the bracket, as shown.

3.7.15 THERMAL HEAD VOLTAGE ADJUSTMENT

⚠CAUTION

- The voltage value affects the durability of the thermal head, and is different for each thermal head. Refer to the exact voltage value that is labeled on each thermal head.
- The adjustment range is between + 0 and – 0.1 volts from the specified value. Never set it out of this range even if there is an image quality problem.
- This adjustment is always required after the thermal head or PSU is replaced.

Purpose: To maintain master making quality and extend the lifetime of the thermal head.

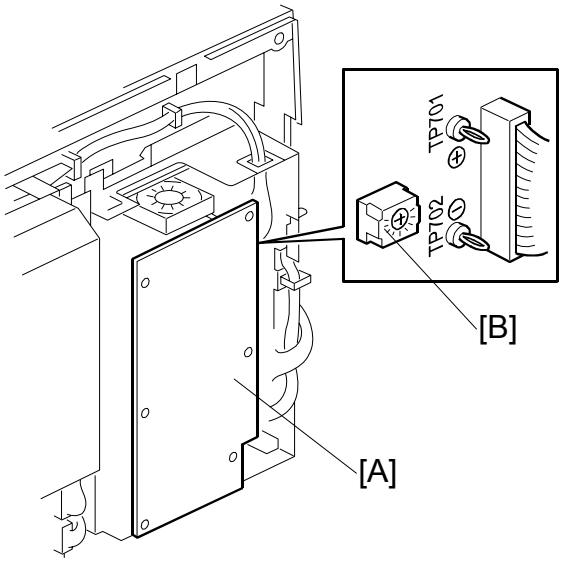

1. Turn off the main switch. Then, remove the rear cover to access the PSU [A].
2. Check the voltage on the thermal head decal.
   NOTE: The value is different for each thermal head.
3. Turn on the main switch and access the SP mode (Clear Modes ⇒ 1 ⇒ 0 ⇒ 7 ⇒ Clear/Stop). Then, select SP 5-010-13 (the thermal head voltage output mode).
4. Press the Start key to apply the voltage to the thermal head. The voltage is continually supplied while the Start key is held down.

   NOTE: As another way to apply the voltage, press the # key instead of the Start key. However, after the # key is pressed, the machine will not stop supplying the voltage until you press the Clear/Stop key or cancel the SP mode. To protect the thermal head, never leave the voltage on for a long time.

5. Measure the voltage between pins TP701 (VHD) and TP702 (GND) on the PSU. Check that it is between + 0 and – 0.1 volts from the specified value that you read from the decal in step 2.
6. If needed, adjust the voltage by turning RV1 [B] on the PSU.

   NOTE: - To increase the voltage: Turn RV1 clockwise
   - To reduce the voltage: Turn RV1 counterclockwise
7. Leave the SP mode.

3.7.16 MASTER END SENSOR ADJUSTMENT

Purpose: To ensure that the sensor detects the end mark (a solid black area) on the master roll.

Standard: 0.8 volts

CAUTION: 1) The sensor adjustment is required in the following cases:
- When the sensor is replaced.
- When the ECU is replaced.

2) If the sensor is dirty, clean or replace it.
3) For how to access the SP mode, refer to the Service Program Mode section. (☛ 5.3.1)

1. Turn on the main switch, then access SP6-004-2 (Sensor Voltage and Threshold Adjustment for Master End Sensor).
2. The sensor threshold value is displayed on the operation panel. Enter 0.8 (volts) with the number keys.
3. Leave the SP mode.

3.7.17 MASTER EDGE SENSOR ADJUSTMENT

Purpose: To ensure that the sensor detects the master properly.

Standard: 0.9 volts (within “+0.1” and “-0.1” volts)

CAUTION: 1) The sensor adjustment is required in the following cases:
-When the sensor is replaced.
-When the I/O board is replaced.
2) While adjusting, make sure to attach all exterior covers to avoid external light.
3) Do not turn the VRs excessively.
4) If the sensor is dirty, clean or replace it.
5) For how to access SP mode, refer to the Service Program Mode section. (☛ 5.3.1)

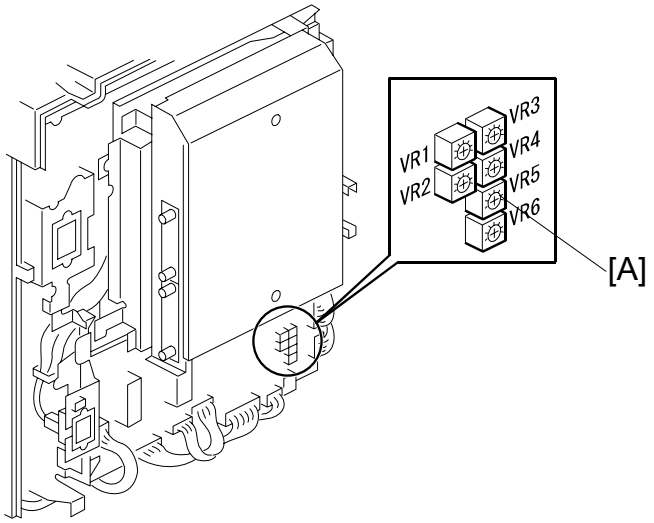

- Rear cover (☛ 3.2.2)
- Master roll
  NOTE: The master roll must not be installed for this adjustment.

2. Turn on the main switch, then access SP6-004-3 (Sensor Voltage and Threshold Adjustment for Master Edge Sensor).
3. Press the Start key.
   - The duct entrance plate opens automatically. The duct plate will stay open for 30 seconds, then it will close automatically.
   - Do the adjustment (step 3) before the duct entrance plate closes.
   - If you cannot complete the adjustment before the plate closes, then press Start again to open the plate.
   - You can also use SP 6-4-7 to adjust the sensor. In that case, when the plate is open, ‘TOP’ will be shown on the display as white-on-black.
4. The sensor input voltage is displayed on the operation panel. Turn VR5 [A] on the I/O board until the value is between 0.8 and 1.0 volt.
5. Leave the SP mode.

3.7.18 MASTER SET SENSOR ADJUSTMENT

Purpose: To ensure that the sensor detects the master properly.

Standard: 1.0 to 1.1 volts

CAUTION: 1) The sensor adjustment is required in the following cases:
-When the sensor is replaced.
-When the I/O board is replaced.
2) While adjusting, make sure to attach all exterior covers to avoid external light.
3) Do not turn the VRs excessively.
4) If the sensor is dirty, clean or replace it.
5) For how to access SP mode, refer to the Service Program Mode section. (☛ 5.3.1)

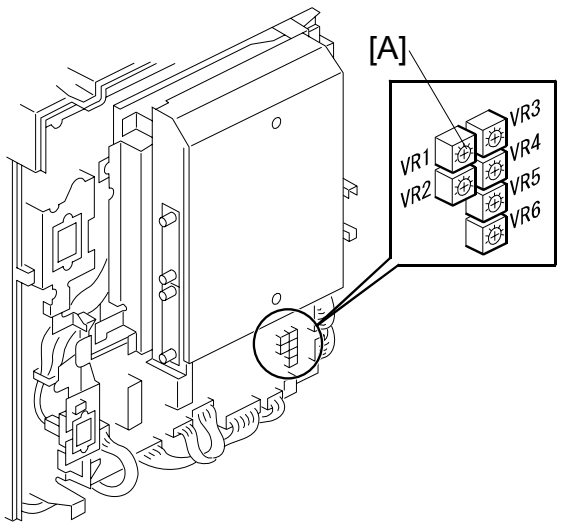

- Rear Cover (☛ 3.2.2)

1. Turn on the main switch, then access SP6-004-4 (Sensor Voltage and Threshold Adjustment for Master Set Sensor).
2. Pull out the master making unit from the machine and open the master set cover.
3. Insert the leading edge of the master under the master set sensor. Then close the master set cover and reinstall the master making unit in the machine.
4. The sensor input voltage is displayed on the operation panel. Turn VR1 [A] on the I/O board until the value is between 1.0 and 1.1 volts.
5. Pull out the master making unit from the machine and open the master set cover.
6. Remove the master from the master making unit. Then close the master set cover and reinstall the master making unit in the machine.

7. Check if the value of SP6-004-4 is 3.0 volts or more.
8. If the sensor input voltage is 3.0 volts or more, adjustment is completed.
9. If the sensor input voltage is less than 3.0 volts, adjust VR1 until the sensor input voltage is 3.0 volts or more
10. Leave the SP mode.

3.7.19 THERMAL HEAD ALIGNMENT ADJUSTMENT

Purpose: To make sure that the original image is correctly reproduced without skew.

- Master making unit (☛ 3.7.1)
- Master making unit right cover (☛ 3.7.3)
- Thermal head cover (☛ 3.7.3)
- Thermal head base (☛ 3.7.3)

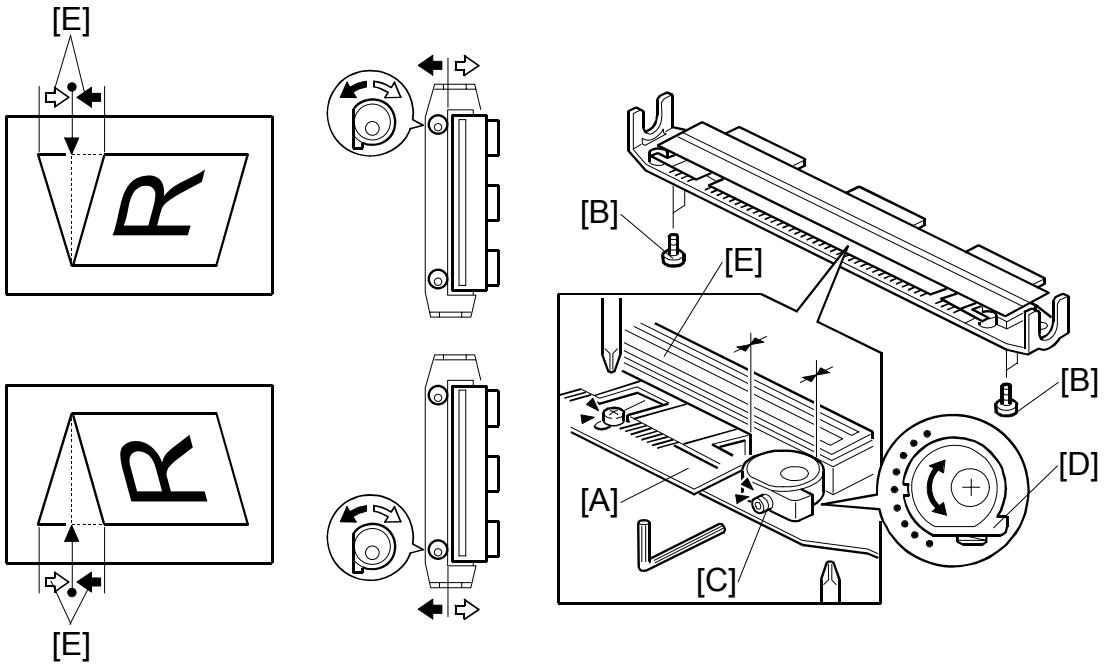

1. Remove the thermal head guide plate [A].
2. Loosen the four screws [B] that secure the thermal head base.
3. Loosen the Allen screws [C].
4. Turn the eccentric bushing [D] at the operation side or the non-operation side. If the eccentric bushings [D] are turned one graduation, the image skew amount [E] is corrected by 0.2 mm.
5. Tighten the Allen screws [C].
6. Tighten the four screws [B] that secure the thermal head base.
7. Install the thermal head guide plate [A].
   NOTE: When you install the thermal head base and the thermal head guide plate, make sure that these are positioned correctly (☛ 3.7.3).
8. Install the thermal head base, thermal head cover, and master making unit right cover. (☛ 3.7.3)
9. Install the master making unit. (☛ 3.7.1)
10. Make a new master and checked if the image skew is correct.

3.7.20 MASTER MAKING UNIT PARALLEL ADJUSTMENT

Purpose: To make sure that the master is correctly wrapped around the drum without skew.

1. Make a new master. The machine will wrap this master around the drum.
2. Take out the drum unit from the machine.

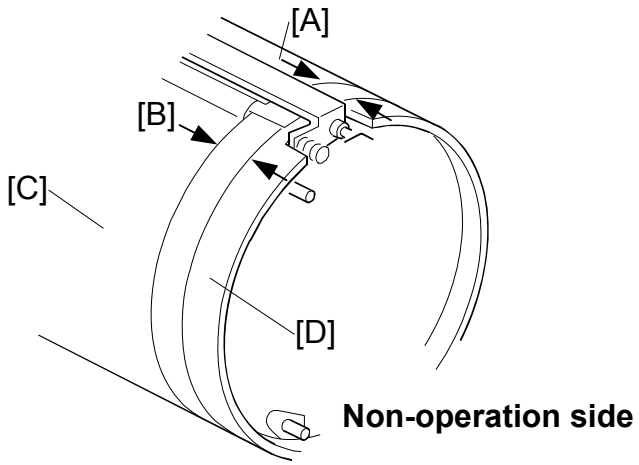

3. Measure the clearance at the leading edge [A] and the trailing edge [B] between the edge of the master [C] and the edge of the metal screen [D].
   NOTE: Standard for A4 drums, A3 drums, and DLT drums: 32.0 mm
4. Remove the master making unit (☛ 3.7.1).

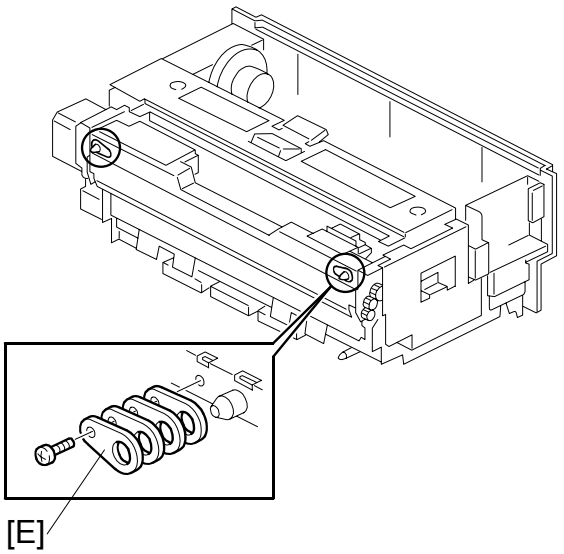

5. Add or remove spacers to adjust the position of the master making unit, if necessary.
   Example: If the value at the leading edge [A] is 32.0 mm and the value at the trailing edge [B] is 31.8mm ([A] – [B] = 32.0 - 31.8= 0.2), remove the spacer [E] at the operation side on the master making unit.
   NOTE: 1) [A] – [B] = Positive value: Decrease the thickness of spacers at the operation side.
   2) [A] – [B] = Negative value: Decrease the thickness of spacers at the non-operation side.
   3) If one spacer is removed, the master skew is corrected by 0.2 mm.
6. Install the master making unit in the duplicator.
7. Make a new master and checked if the master skew is correct.

3.7.21 MASTER EDGE TRIMMING PROCEDURE

Purpose: To even off the leading edge of the master roll, if the edge was not cut evenly. This happens, for example, after a master misfeed jam (D-Jam).

NOTE: The following procedure cannot be done if a misfeed or SC error condition was not corrected.

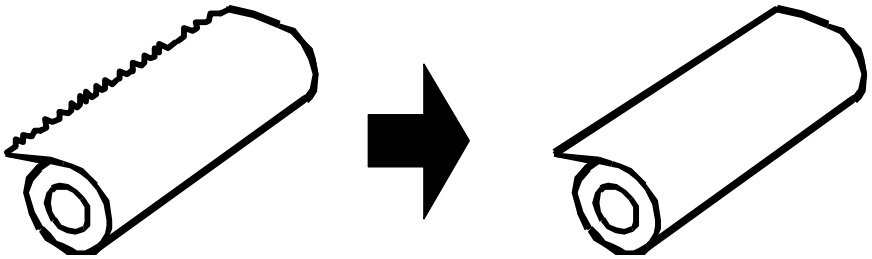

1. Load the master roll in the master making unit.

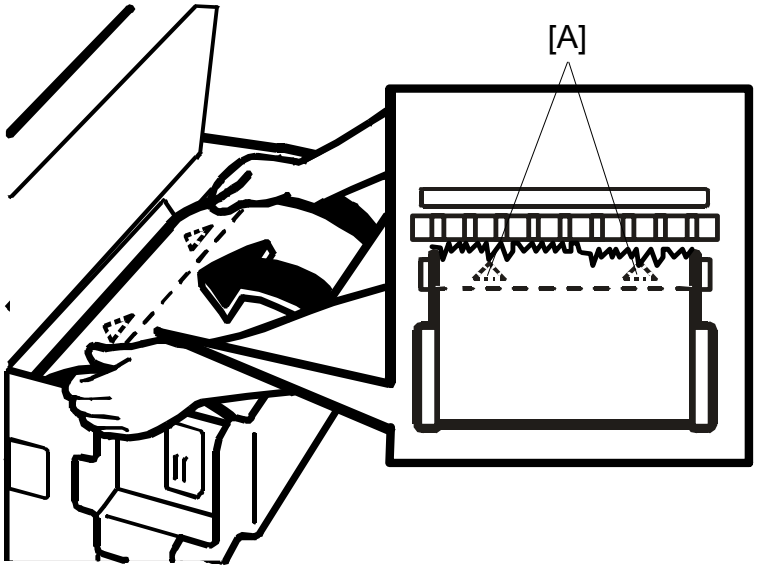

2. Feed the leading edge manually until it covers the two arrow marks [A].

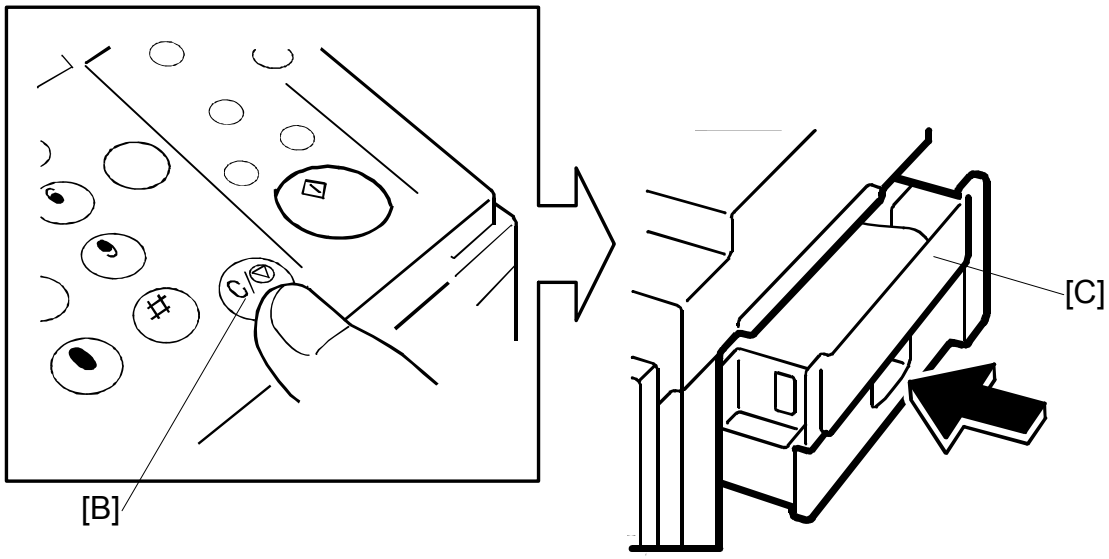

3. Press the Clear/Stop key [B]. Then, while holding this key down, push in the master making unit [C].
   NOTE: The machine will then trim the leading edge. After this is completed, a beep will be heard and the operation panel will show “Master Misfeed” and “remove the cut master.”
4. Open the master making unit and remove the trimmed portion.

3.7.22 MASTER FEED MYLAR POSITIONING

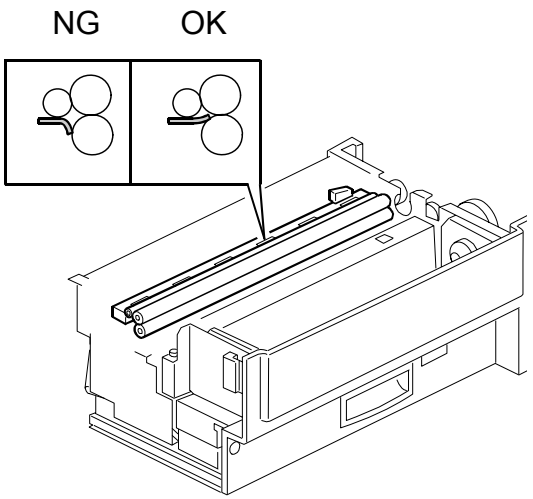

Cutter Unit
After the tension roller

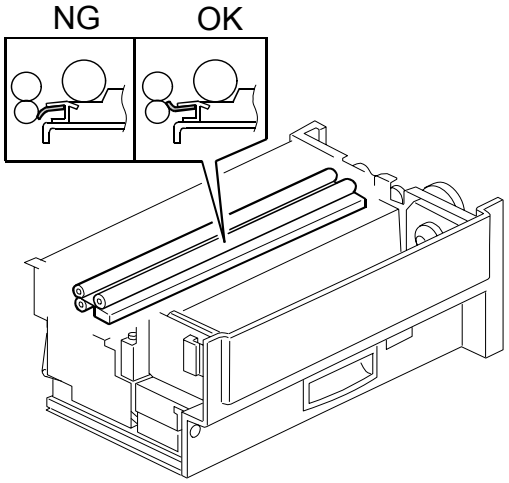

Thermal Head Base
Before the tension roller

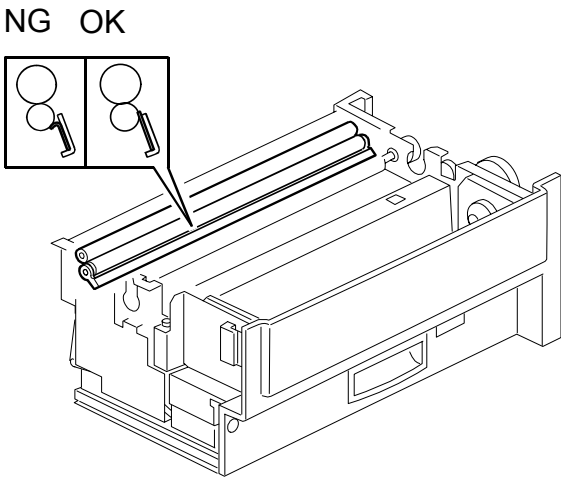

Buffer Duct Entrance Plate
Before the Master Feed Control Roller

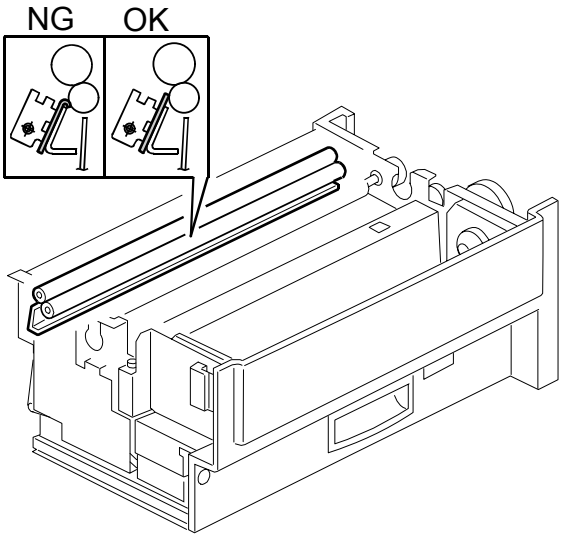

Lower Master Feed Control Roller
Exit Guide Plate

PURPOSE: These strips of mylar are easily put in the wrong position. Take care to set these properly to avoid master jams.

PROCEDURE:

When replacing or removing the thermal head, the cutter unit, the master duct, or the guide plate of the lower master feed control roller, install the lower tension roller or lower master feed control roller as shown in the illustration.

3.8 DRUM SECTION

3.8.1 DRUM UNIT

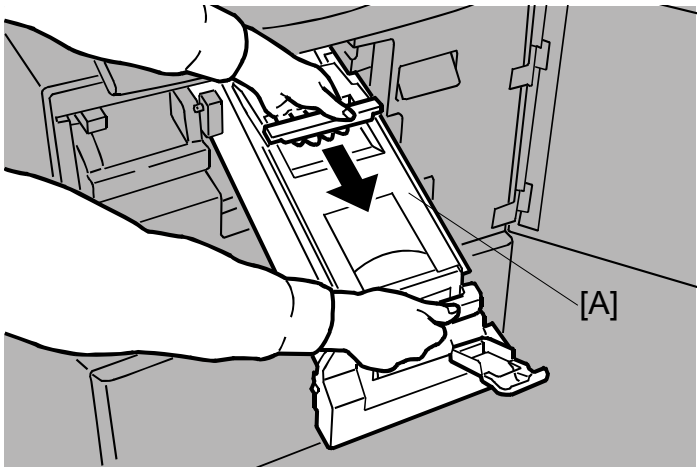

- First, open the front cover.

[A]: Drum unit

3.8.2 DRUM CLOTH SCREEN

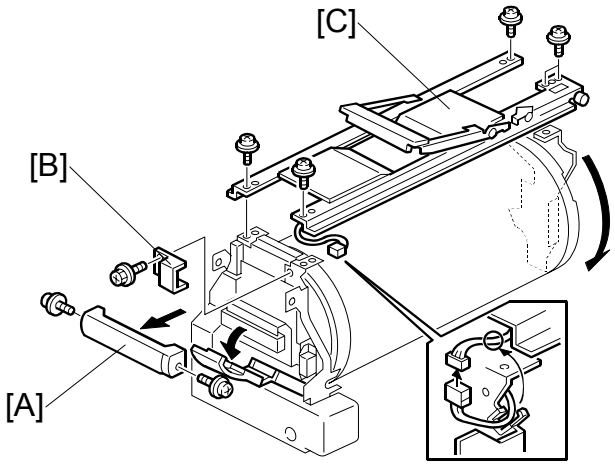

[A]: Drum release grip (x 2)
[B]: Connector cover (x 1)
[C]: Drum handle (x 5, x 1)

NOTE: Do not put the drum unit upside down. However, if you must put it upside down, wipe off the ink around the ink roller first (use SP2-2-1, select OFF, and feed paper until ink ends). After you complete your work on the machine, make sure to return SP2-2-1 to its default (ink detection ON).

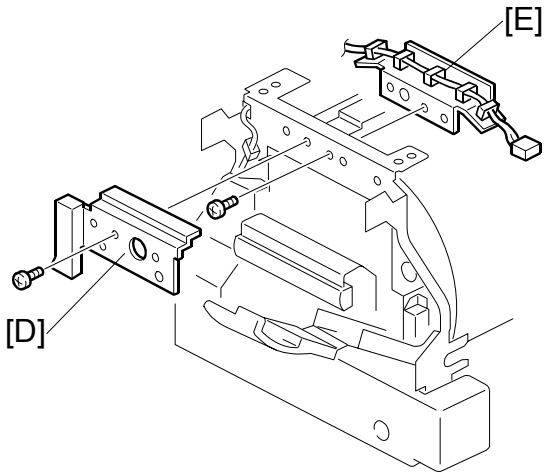

[D]: Front bracket (🔩 x 1)
[E]: Front inner bracket (🔩 x 1)

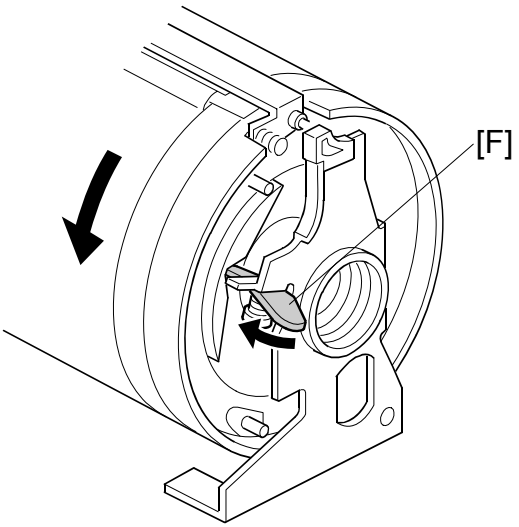

[F]: Loosen the stopper [F]. Then turn the drum until the clamper unit is positioned on the top of the drum.

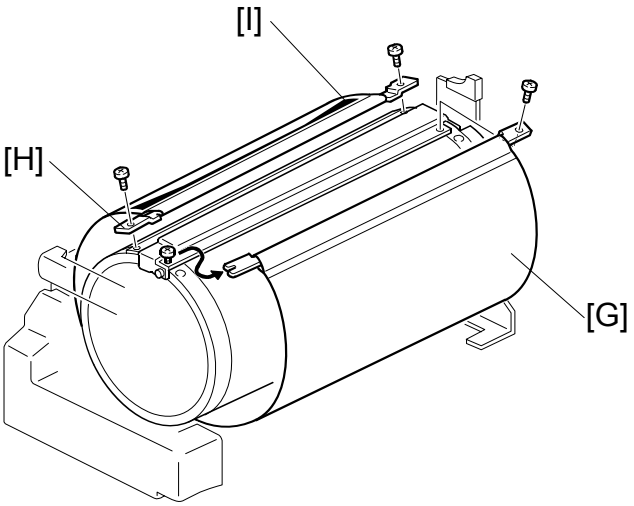

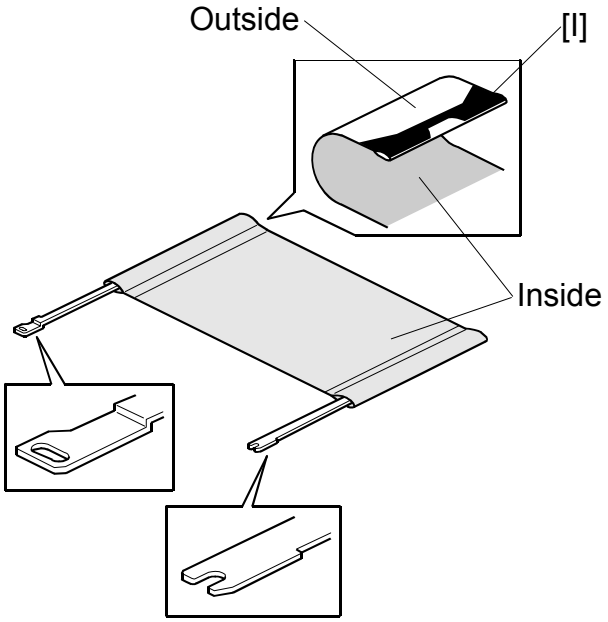

[G]: Drum screen (☞ x 4)

CAUTION: 1) Do not scratch the cloth screen or metal screen.
2) When replacing the cloth screen, spread the screen around the metal screen while strongly pulling the stay [H]. Adjust the stay so that it is parallel to the master clamper, then tighten the screws.
3) When installing the new screen, the black sensor patch [I] must be to the left of the master clamper. (Position the clamper on the top of the drum, and view from the operation side - refer to the above illustration.)
4) Make sure that the correct side of the screen is facing up. (Refer to the illustration below.)
5) Make sure that the stays for securing the cloth screen are positioned correctly. (Refer to the illustration below.)

After you install a new cloth screen, reset the counter for this part with SP 3-4-1.

3.8.3 DRUM MASTER CLAMPER, METAL SCREEN

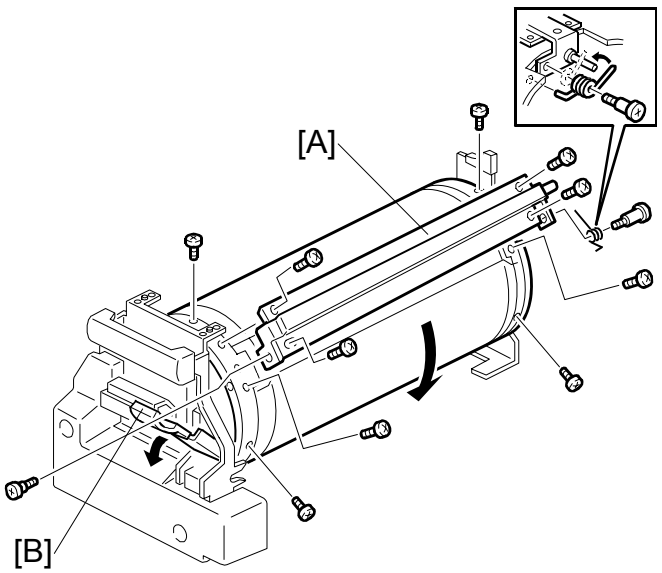

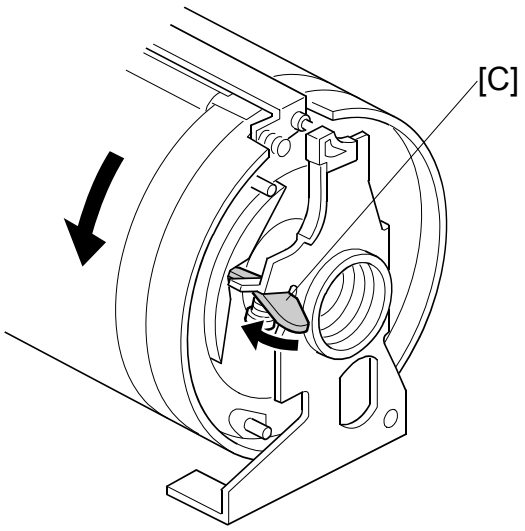

- Drum cloth screen (☛ 3.8.2)

[A]: Drum clamper (🔩 x 2)

NOTE: 1) To remove the drum clamper screw on the operation side, turn the drum into the position shown in the first diagram and pull out the lever [B]. To rotate the drum, release the stopper [C] on the rear of the drum.
2) When replacing the drum clamper, install the spring on the opposite side as shown in the illustration.
3) Do not put the drum unit upside down. However, if you must put it upside down, wipe off the ink around the ink roller first (use SP2-002-1, select OFF, and feed paper until ink ends). After you complete your work on the machine, make sure to return SP2-2-1 to its default (ink detection ON).

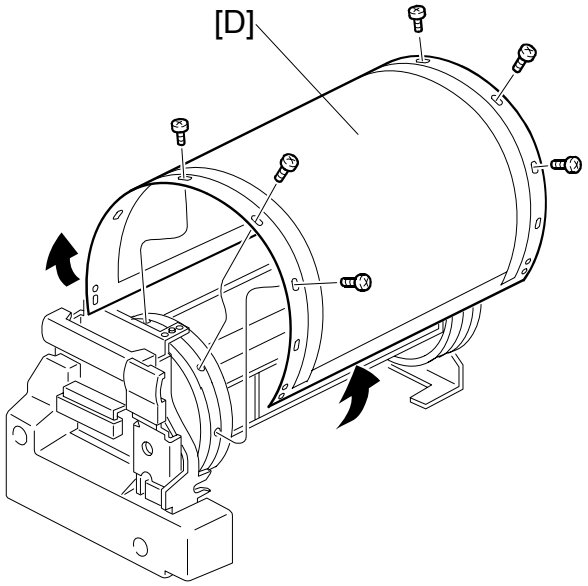

[D]: Metal screen (🔩 x 12)

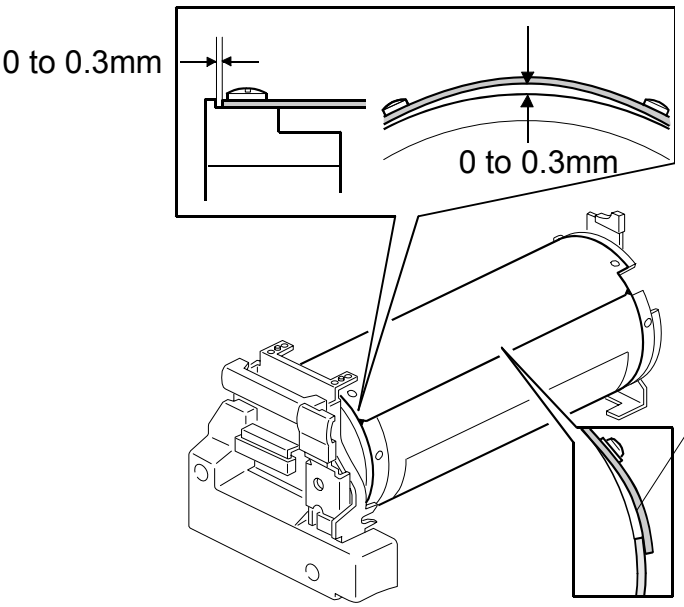

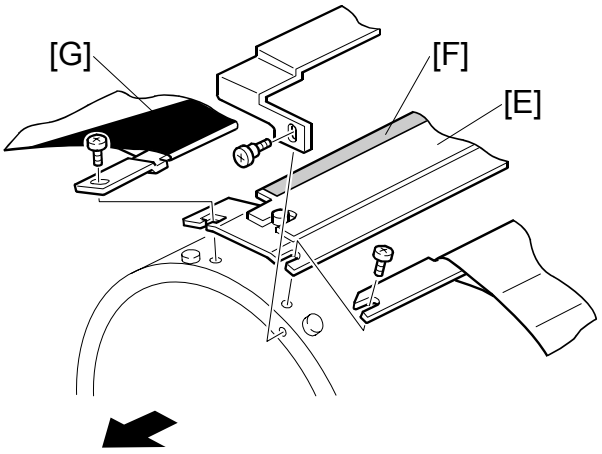

Operation Side

CAUTION: 1) Do not scratch the cloth screen or metal screen.
2) Make sure that the correct end of the metal screen is overlapping. (Refer to the lower right part of the upper illustration.)
3) When attaching the metal screen to the drum flanges, wrap it so that the gap is correct. (Refer to the upper part of the upper illustration.)
4) When installing the master clamper [E], make sure that it is the correct way around. The side with the sandpaper [F] must be facing the black patch [G].
5) Do not allow the inside of the master clamper to become dirty with ink. If it is dirty with ink, the master may slip off and the image position on the prints will move toward the trailing edge of the print during a printing run.
6) Use a cloth dampened with water to clean the inside of the master clamper. Do not use alcohol or other solvents. The clamping force of the magnet will be weakened.

3.8.4 MOTORS AND SENSORS IN THE DRUM

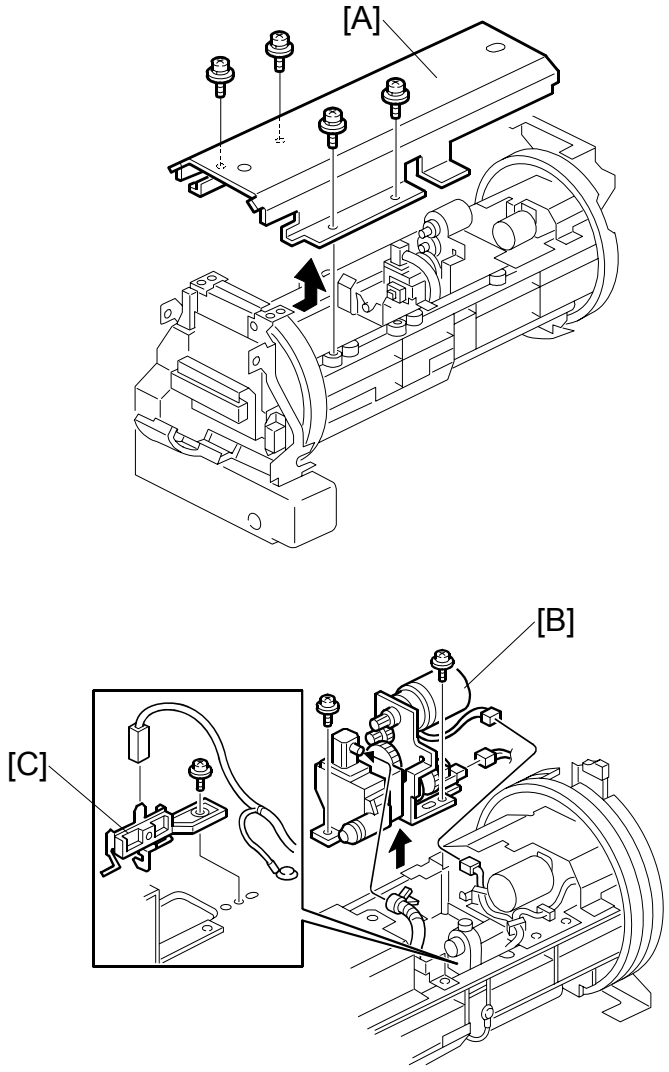

- Drum cloth screen (☛ 3.8.2)
- Drum clamper (☛ 3.8.3)
- Metal screen (☛ 3.8.3)

1. First, pull out the ink cartridge holder.

[A]: Ink cartridge cover (🔩 x 4)
[B]: Ink pump unit (🔩 x 3, 🔌 x 1)
[C]: Ink detection pin (🔩 x 1, 🔌 x 1)

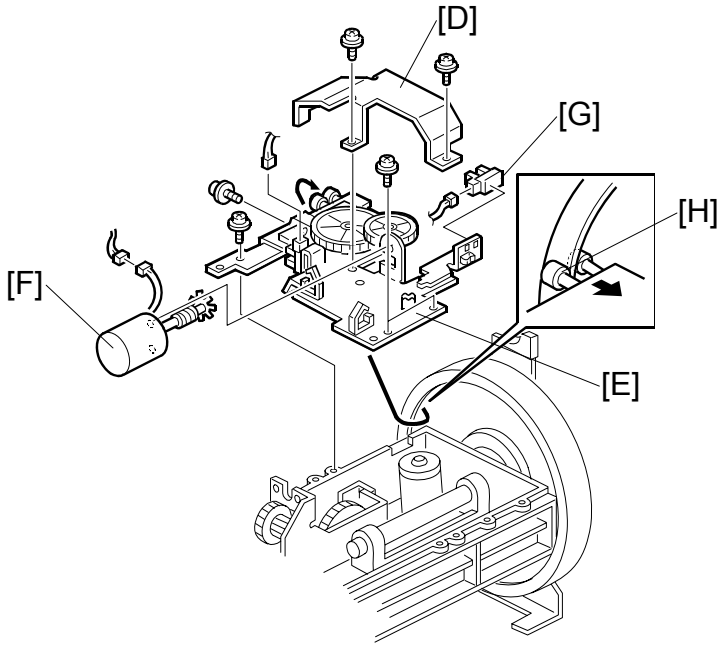

[D]: Drum shift motor cover (x 2)
[E]: Drum shift motor unit (x 4, x 4)
[F]: Drum shift motor
[G]: Drum shift HP sensor

NOTE: When reinstalling the drum shift motor unit, insert the bearings [H] into the drum flange edge, as shown.

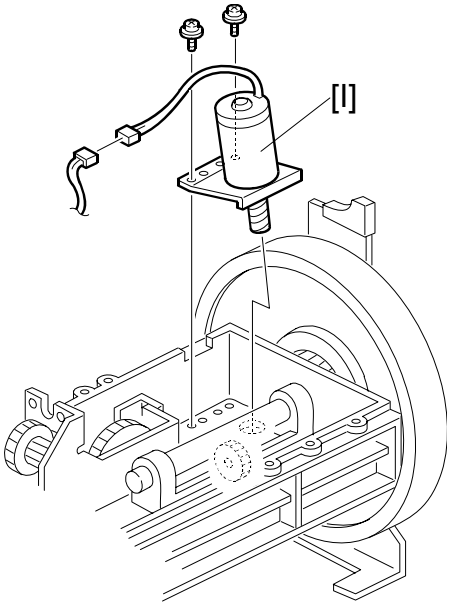

[I]: Idling roller motor (x 2, x 1)

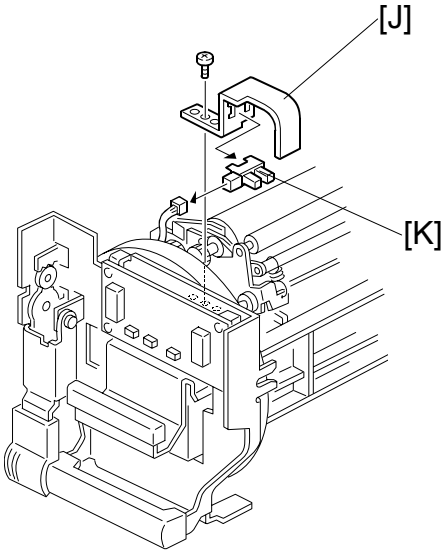

[J]: Sensor bracket (x 1)
[K]: Idling roller HP sensor (x 1)

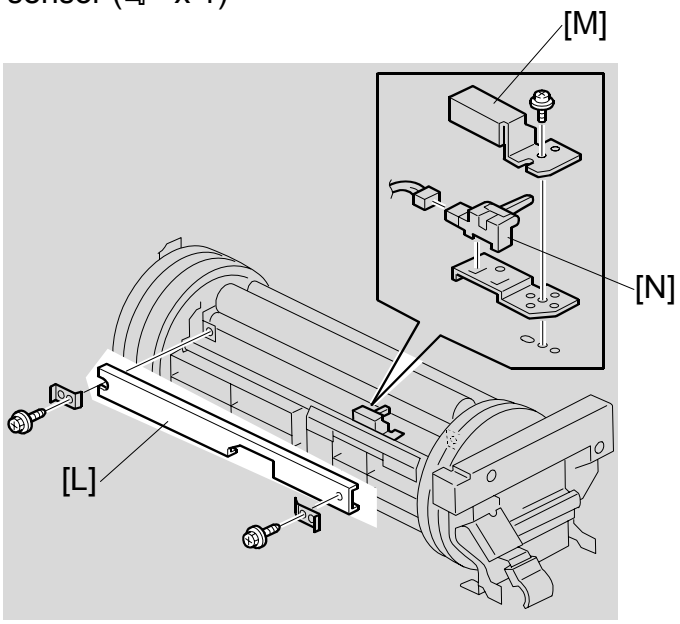

[L]: Ink supply roller cover (x 2)
[M]: Sensor bracket (x 1)
[N]: Ink flow sensor (x 1)

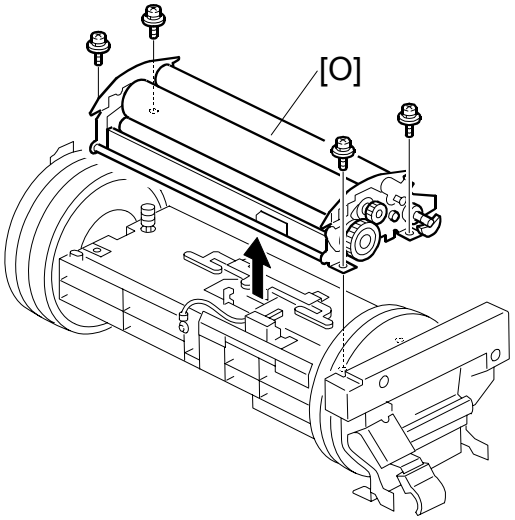

[O]: Ink supply roller unit (x 4)

3.8.5 INK ID DETECTION/INK FLOW SENSOR CONNECTOR

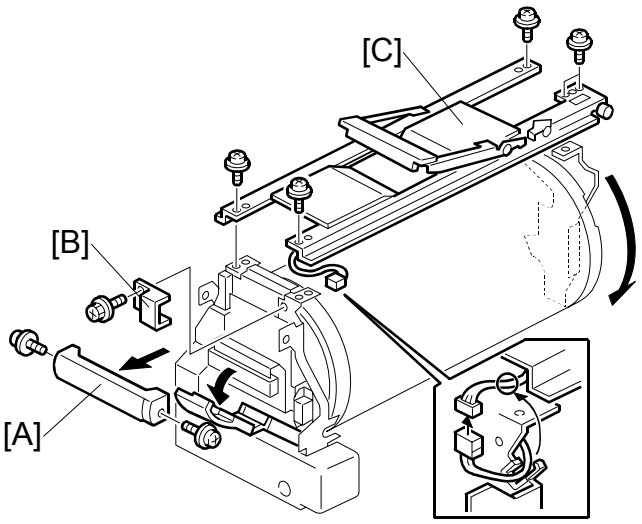

[A]: Drum release grip (x 2)
[B]: Connector cover (x 1)
[C]: Drum handle (x 5, x 1)

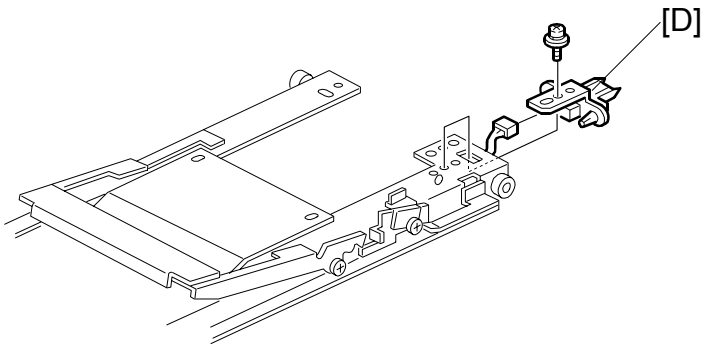

[D]: Ink ID detection/Ink flow sensor connector (☞ x 1, ☜ x 1)

3.8.6 INK ROLLER GAP ADJUSTMENT

Purpose: To ensure that ink on the ink roller spreads evenly on the drum screen.

1. Take out the drum unit from the machine.

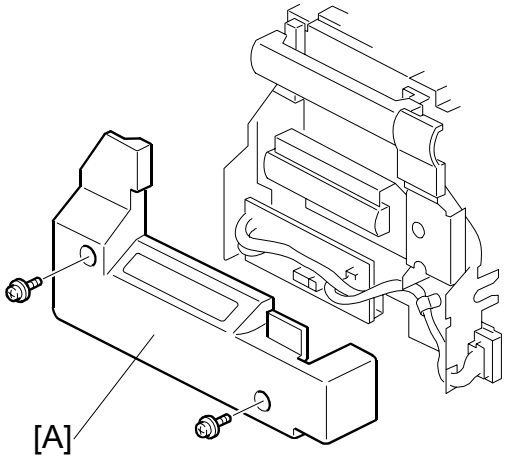

2. Remove the drum front cover [A] (☞ x 2).
3. Remove the drum cloth and metal screens from the drum unit. (☛ 3.8.2)
4. Wipe off the ink around the ink roller and the doctor roller.

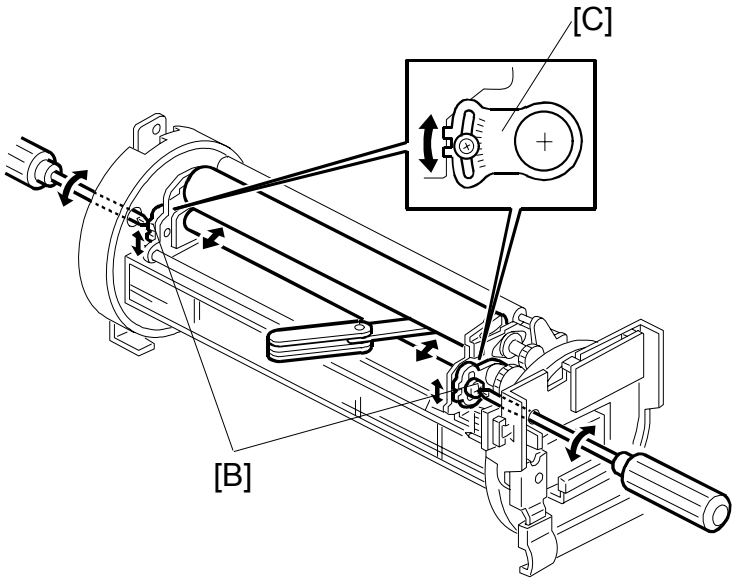

5. Insert a 0.08-mm gap gauge between the doctor roller and the ink roller. Then, make sure that a 0.1-mm gauge cannot pass through the gap.
   NOTE: Check the gap at the left, center, and right.
6. If the gap is not correct, loosen the screws [B] on both sides and adjust the gap by turning the eccentric bushings [C] at each side.

⇒3.8.7 INK DETECTION

SP6-8-1 Ink Detection Pulse

Purpose: With this SP, you can adjust the ink detection pulse very simply.

NOTE: This procedure is to calibrate the voltage of the ink sensor for the Ink End condition. This ensures that the sensor can correctly detect the Ink End condition. This procedure is easier to do than the original procedure (Ink Detection Adjustment – next page).

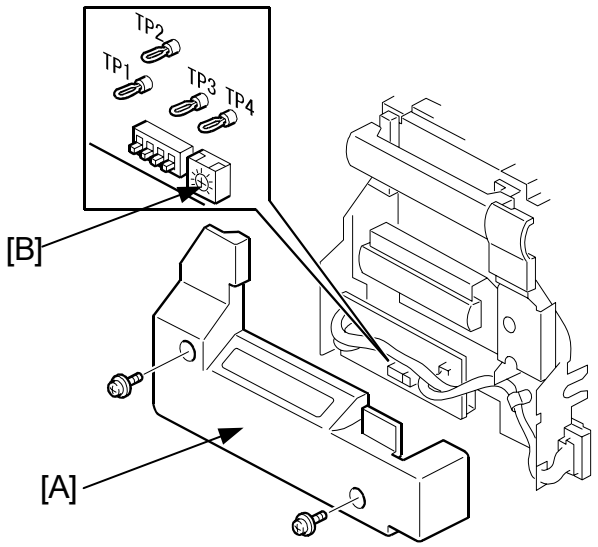

IMPORTANT: If you cannot correctly calibrate the sensor with this procedure, try the Ink Detection Adjustment procedure.

1. Remove the ink around the ink roller:
   - Set SP2-2-1 (Ink Detection) to **OFF**, and then
   - Feed paper until the ink reaches the end condition
2. Pull the drum out and remove the drum front cover [A] and ink cartridge.
3. Push the drum back inside the machine.
4. Turn **ON** the main switch.
5. Access SP6-008-1 (Ink sensor).
6. The detection voltage is displayed on the operation panel. Turn VR901 [B] on the ink detection board until the value becomes **6.0 μs**.
7. Return SP2-2-1 to **ON**.

⟹ *Ink Detection Adjustment*

Purpose: To ensure correct detection of a no-ink condition when all the ink has been consumed.

CAUTION: Before you do this procedure, be sure to remove the ink around the ink roller. To do this, set SP2-2-1 (ink detection) to OFF, and then feed paper until the ink reaches the end condition. After you complete the following procedure, make sure to return SP2-2-1 to its default (ink detection ON).

1. Remove the drum front cover [A].
2. Connect the probes and grounding lead of an oscilloscope to the following points on the ink detection board [B]:
   - Probe CH1 to TP1
   - Probe CH2 to TP2
   - Grounding lead to TP3 and TP4
3. Select the 5 μs range.
4. Turn ON the main switch.
5. Make sure that the waveform is as shown in the top half of the following diagram when the ink detection pin is not in contact with the ink.

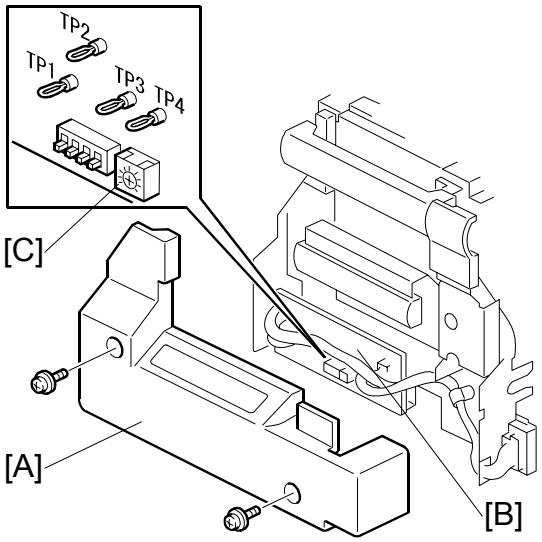

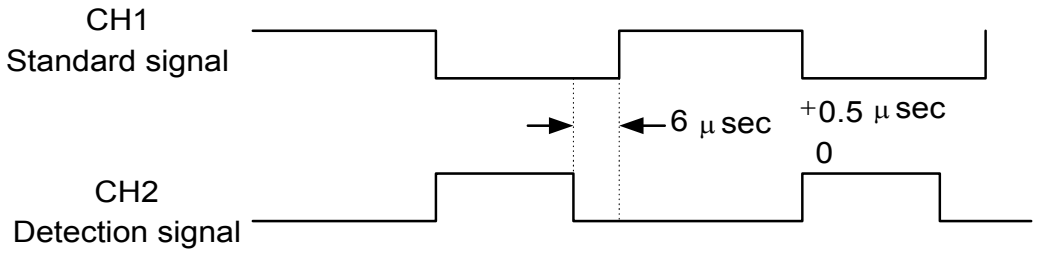

6. If incorrect, adjust the standard signal by turning VR901 [C] on the ink detection board.

3.8.8 DRUM POSITION ADJUSTMENT

Purpose: To prevent the back edge of the master from coming 1.5 to 2.0 mm closer on the non-operation side during printing, which causes the image to turn obliquely on the paper.

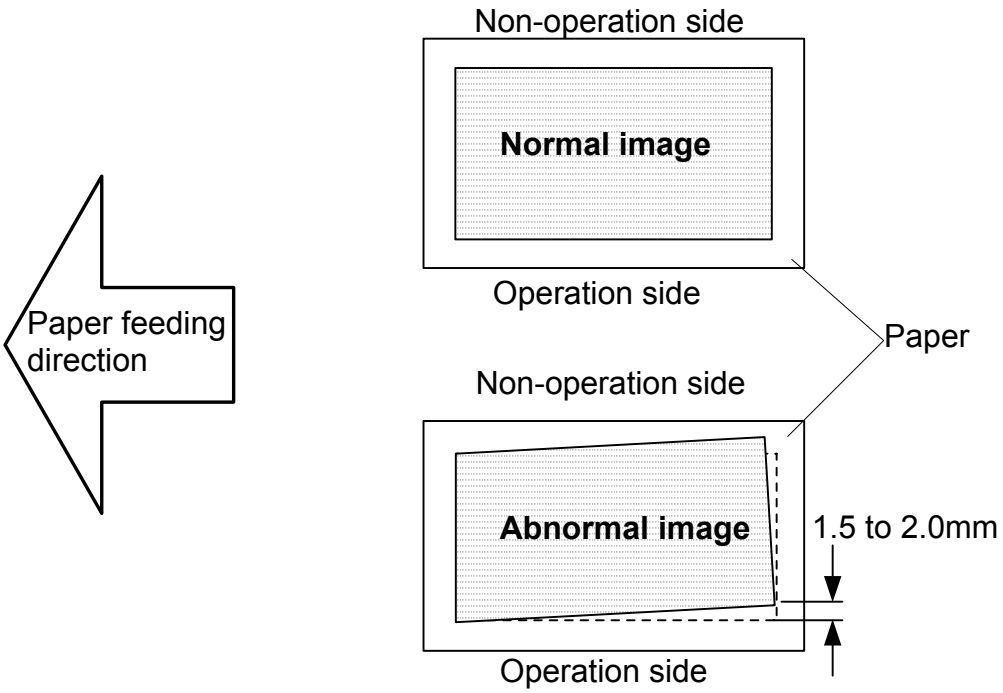

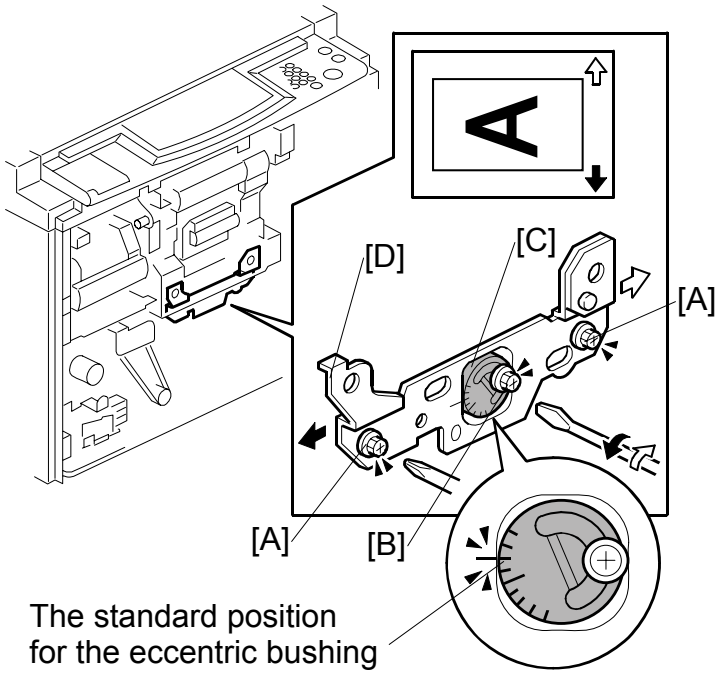

1. Loosen the three screws [A] [B].
2. Turn the eccentric bushing [C], if the back edge of the master comes close to the non-operation side.

   NOTE: 1) As a rough guide, if the edges moved to the non-operation side by 1.0 mm, turn the eccentric bushing [C] counterclockwise one graduation.
   2) Please check the machine after adjusting, because the effect of moving the bushing by one graduation differs for each machine. To do this, print about 1000 sheets and compare the 10th sheet with the 1000th sheet.
3. Tighten the screw [B].
4. Shift the drum position plate [D] in the paper table direction (to the right) and tighten the two screws [A].

3.8.9 1ST DRUM MASTER SENSOR ADJUSTMENT

Purpose: To ensure that the sensor detects the master properly.

Standard: 1.0 to 1.2 volts

CAUTION: 1) The sensor adjustment is required in the following cases:
-When the sensor is replaced.
-When the I/O board is replaced.
2) While adjusting, make sure to attach all exterior covers to avoid external light.
3) Do not turn the VRs excessively.
4) If the sensor is dirty, clean or replace it.
5) For how to access SP mode, refer to the Service Program Mode section. (☛ 5.3.1)

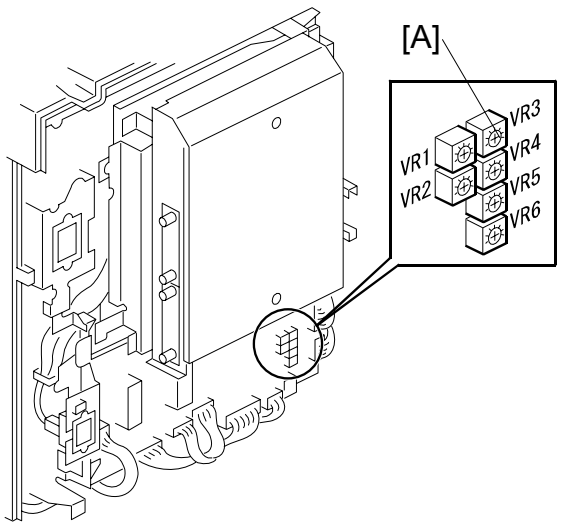

- Rear Cover (☛ 3.2.2)

1. Remove the master that is wrapped around the drum, and install the drum in the main body.
2. Turn on the main switch, then access SP6-004-5 (Sensor Voltage and Threshold Adjustment for 1st drum master sensor).
3. The sensor input voltage is displayed on the operation panel. Turn VR3 [A] on the I/O board until the value is between 1.0 and 1.2 volts.
4. Set SP2-006-8 (Make master without printing) to 'On'. Then press the "Start" key while holding down the "." Key. This wraps a blank master around the drum.
5. Access SP6-004-5 (Sensor Voltage and Threshold Adjustment for 1st drum master sensor).
6. The sensor input voltage is displayed on the operation panel. Check if it is 3.0 volts or more.

7. If the sensor input voltage is 3.0 volts or more, adjustment is completed.
8. If the sensor input voltage is less than 3.0 volts, adjust VR3 until the sensor input voltage is 3.0 volts or more
9. Leave the SP mode.

3.8.10 2ND DRUM MASTER SENSOR ADJUSTMENT

Purpose: To ensure that the sensor detects the master properly.

Standard: 1.0 to 1.2 volts

CAUTION: 1) The sensor adjustment is required in the following cases:
-When the sensor is replaced.
-When the I/O board is replaced.
2) While adjusting, make sure to attach all exterior covers to avoid external light.
3) Do not turn the VRs excessively.
4) If the sensor is dirty, clean or replace it.
5) For how to access SP mode, refer to the Service Program Mode section. (☛ 5.3.1)

- Rear Cover (☛ 3.2.2)

1. Remove the master that is wrapped around the drum, and install the drum in the main body.

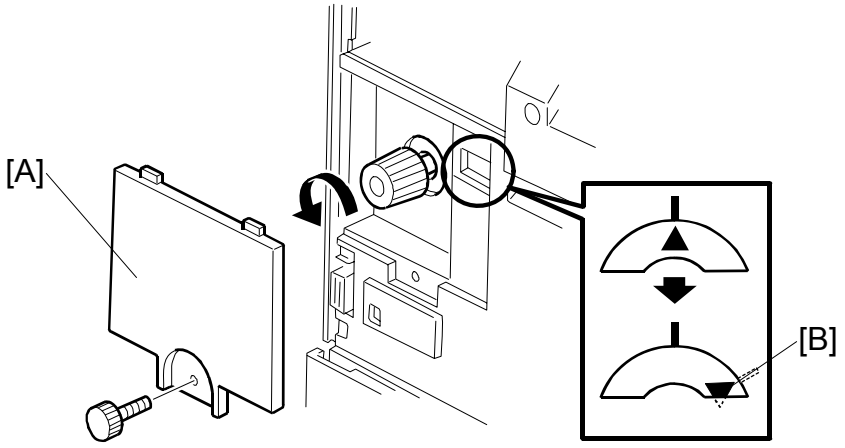

2. Remove the knob cover [A] and turn the knob until the indicator moves to the point shown [B].
   NOTE: This step moves the black patch on the drum screen to the sensor.
3. Turn on the main switch, then access SP6-004-6 (Sensor Voltage and Threshold Adjustment for 2nd drum master sensor).

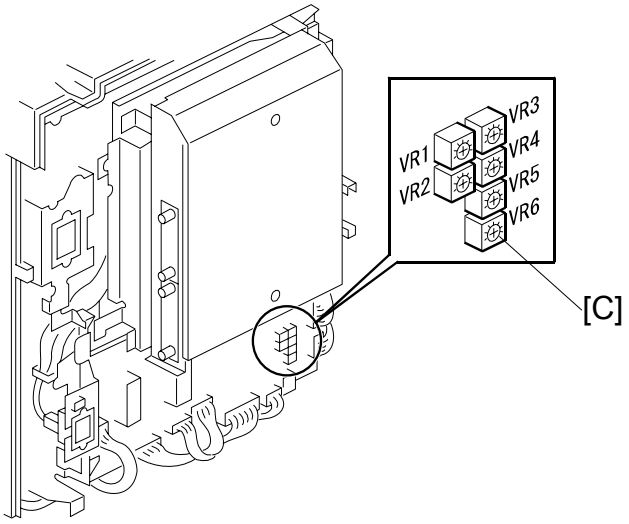

4. The sensor input voltage is displayed on the operation panel. Turn VR6 [C] on the I/O board until the value is between 1.0 and 1.2 volts.
5. Set SP2-006-8 (Make master without printing) to 'On'. Then press the "Start" key while holding down the "." Key. This wraps a blank master around the drum.
6. Turn the knob until the indicator moves to the point shown [B].
   NOTE: This step moves the black patch on the drum screen to the sensor.
7. Access SP6-004-6 (Sensor Voltage and Threshold Adjustment for 2nd drum master sensor).
8. The sensor input voltage is displayed on the operation panel. Check if it is 3.0 volts or more.
9. If the sensor input voltage is 3.0 volts or more, adjustment is completed.
10. If the sensor input voltage is less than 3.0 volts, adjust VR6 until the sensor input voltage is 3.0 volts or more
11. Leave the SP mode.

3.9 PAPER FEED SECTION

3.9.1 PAPER TABLE UNIT, PAPER FEED ASSEMBLY

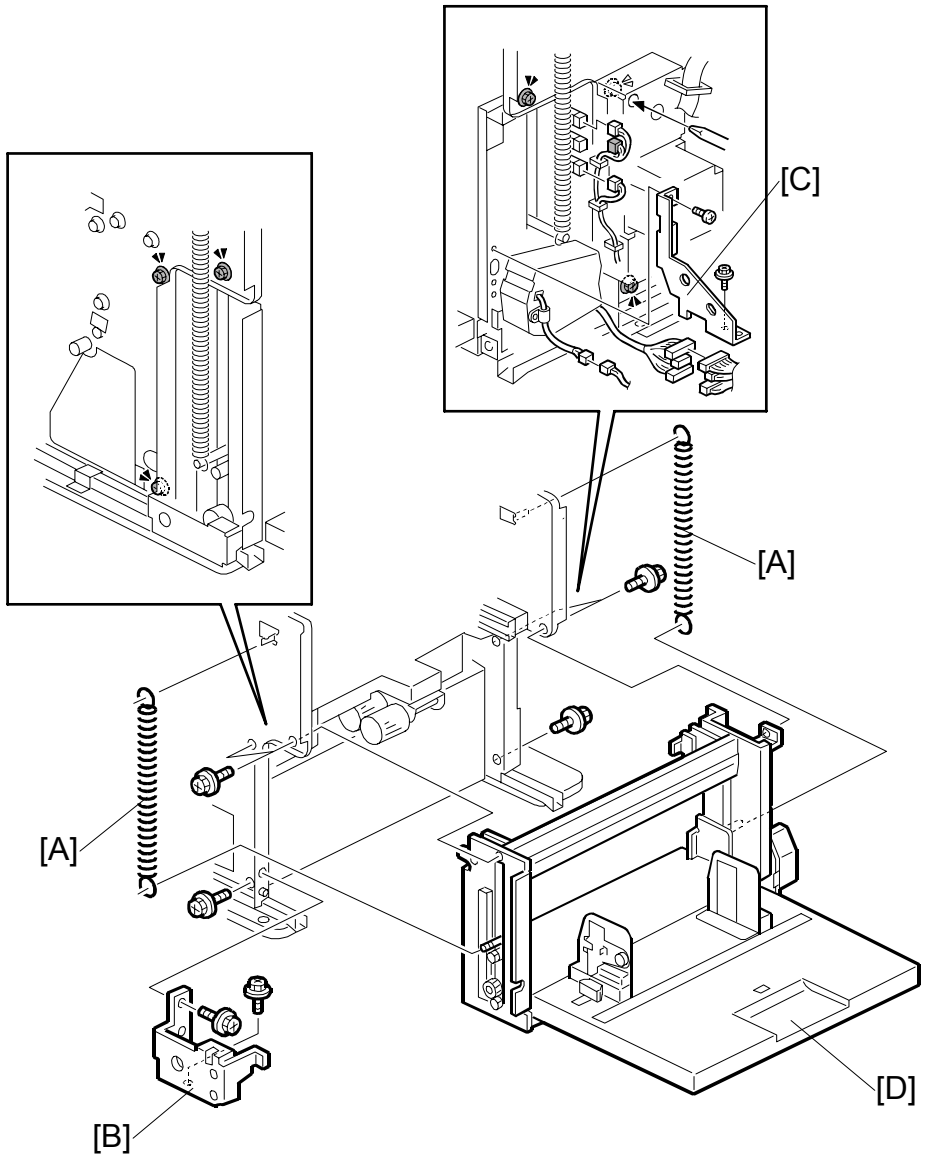

- Front cover, Knob cover, Inner cover (☛ 3.2.1)
- Rear cover, Right rear cover, Right front cover (☛ 3.2.2)
- Open out the ACU - ECU assembly (☛ 3.5.1)

[A]: Springs
[B]: Front bracket (x 2)
[C]: Rear bracket (x 2)
[D]: Paper table unit (x 6, x 7)

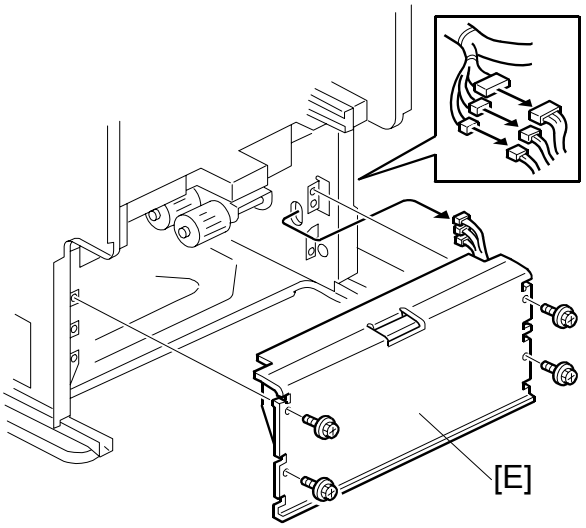

[E]: Paper feed assembly (x 4, x 3)

3.9.2 PICK-UP ROLLER, PAPER FEED ROLLER

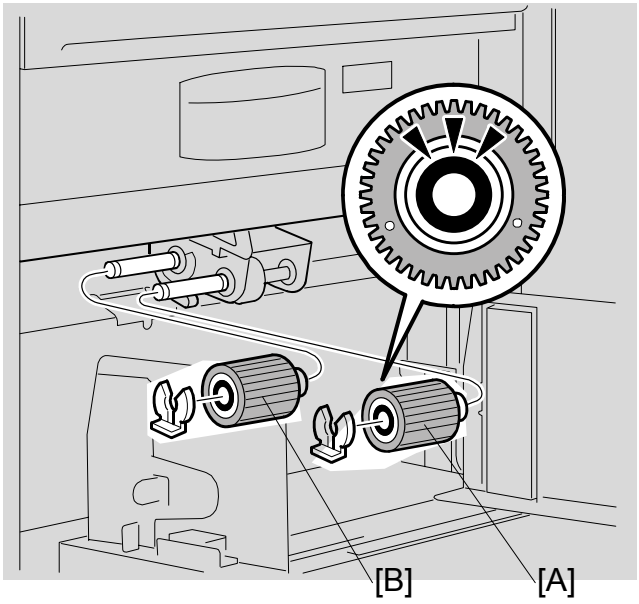

[A]: Pick-up roller (x 1)
[B]: Paper feed roller (x 1)

NOTE: 1) When you install the pick-up roller and the paper feed roller, position the one-way clutch correctly. (The clutch must point towards the front of the machine, as shown in the diagram.)
2) After you install a new feed roller, reset the counter for this part with SP 3-4-3.
3) After you install a new pick-up roller, reset the counter for this part with SP 3-4-4.

3.9.3 PAPER WIDTH DETECTION BOARD

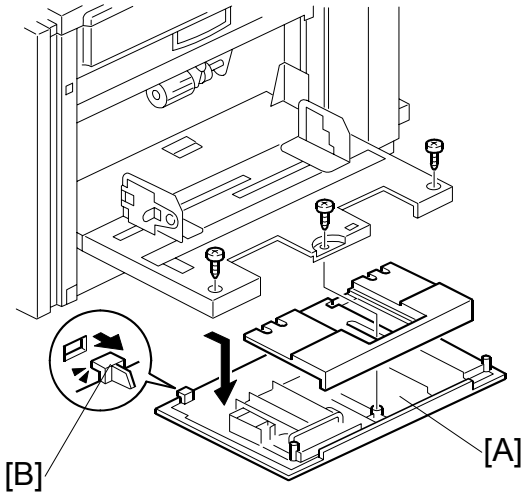

[A]: Paper table rear cover (x 3)
NOTE: Carefully push out the two hooks [B] with a screwdriver.

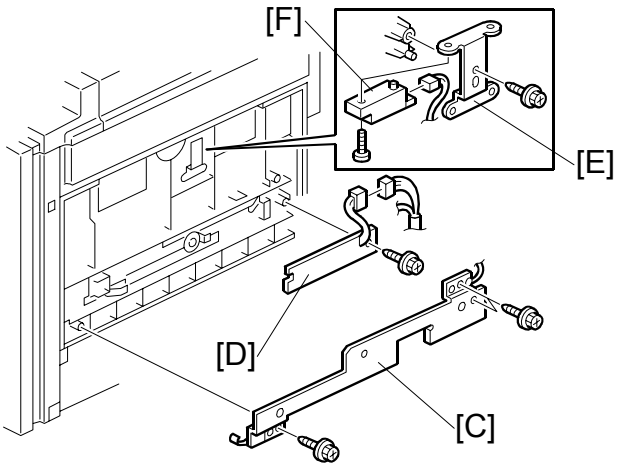

[C]: Paper width detection board bracket (x 3)
[D]: Paper width detection board (x 1, x 1)
[E]: Paper length sensor bracket (x 1)
[F]: Paper length sensor (x 1, x 1)

3.9.4 PAPER HEIGHT SENSOR

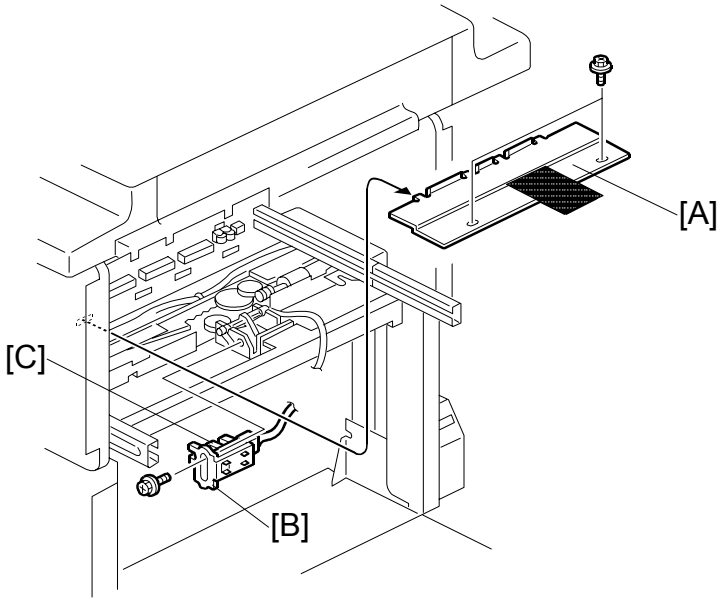

- Master making unit (☛ 3.7.1)

[A]: Feed cover (🔩 x 2)
[B]: Paper height sensor bracket (🔩 x 1, 🖐 x 1)
[C]: Paper height sensor

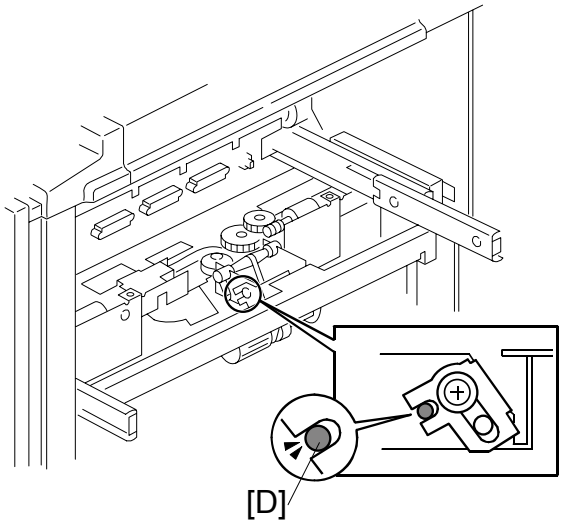

NOTE: When you install the paper height sensor bracket, make sure that the small hole in the stay [D] is in the line with the cutout in the bracket, as shown.

3.9.5 FEED PRESSURE MOTOR, FEED PRESSURE DETECTION BOARD

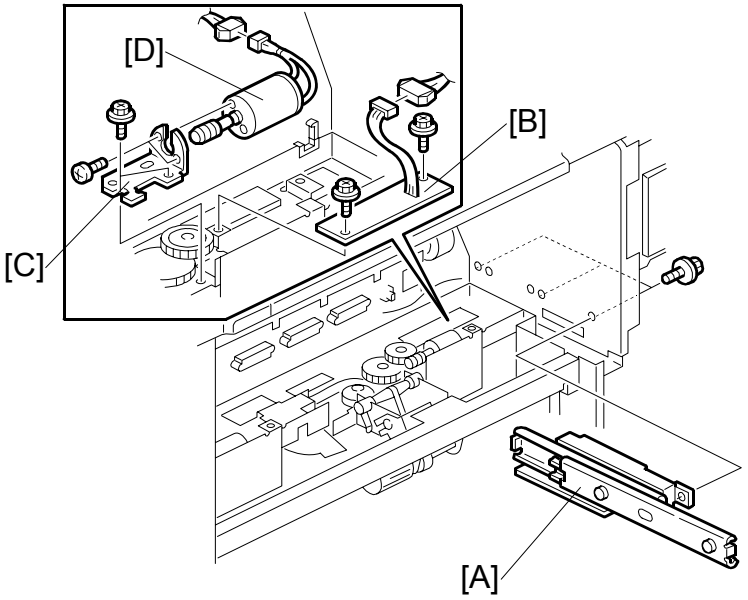

- Master making unit (☛ 3.7.1)
- Feed cover (☛ 3.9.4)
- Open out the ACU - ECU assembly (☛ 3.5.1)
- Double feed detector board (☛ 3.5.4)

[A]: Rear rail bracket (🔩 x 3)
[B]: Feed pressure detection board (🔩 x 2, 🖐 x 1)
[C]: Feed pressure motor bracket (🔩 x 2, 🖐 x 1)
[D]: Feed pressure motor (🔩 x 2)

3.9.6 REGISTRATION PRESSURE MOTOR, REGISTRATION ROLLER PRESS SENSOR, REGISTRATION ROLLER RELEASE SENSOR

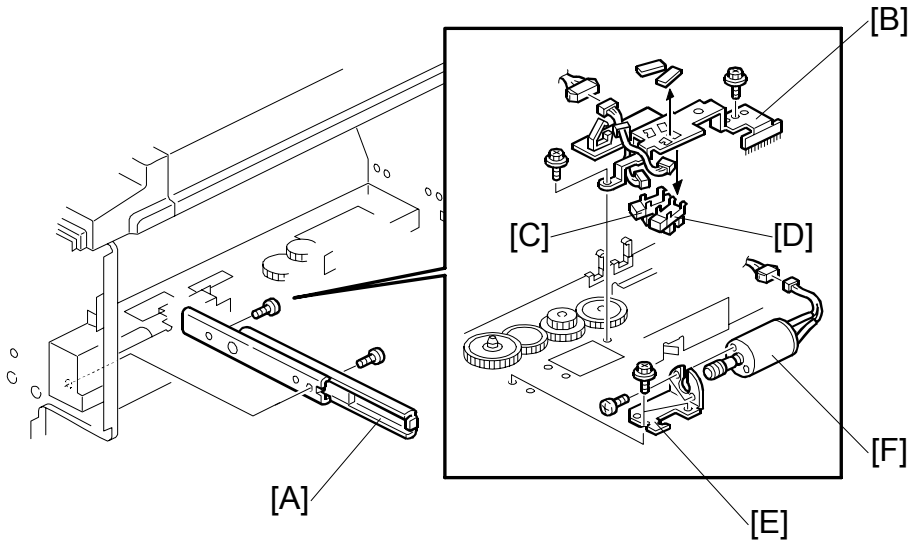

- Master making unit (☛ 3.7.1)
- Feed cover (☛ 3.9.4)

[A]: Front rail bracket (x 2)
[B]: Registration roller sensor bracket (x 2, x 1)
[C]: Registration roller press sensor (x 1)
[D]: Registration roller release sensor (x 1)
[E]: Registration pressure motor bracket (x 2, x 1)
[F]: Registration pressure motor (x 2)

3.9.7 PAPER REGISTRATION SENSOR, PAPER FEED TIMING SENSOR

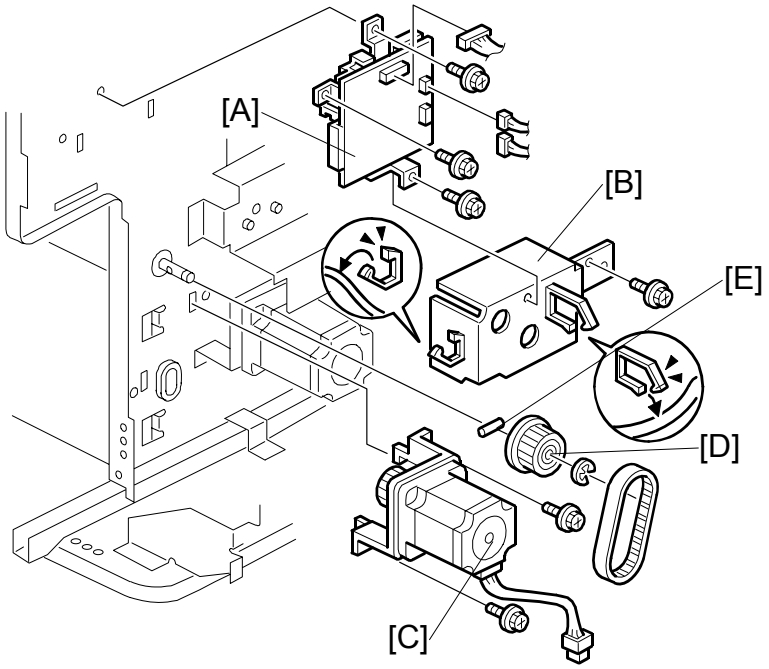

- Rear cover, Right rear cover (☛ 3.2.2)
- Master making unit (☛ 3.7.1)
- Feed cover (☛ 3.9.4)
- Paper table unit (☛ 3.9.1)
- Paper feed assembly (☛ 3.9.1)
- Open out the ACU - ECU assembly (☛ 3.5.1)

[A]: Double feed detector board (x 3, x 3)
[B]: Motor cover (x 1)
[C]: Paper feed motor (x 2)
[D]: Pulley (x 1)

NOTE: Do not lose the key [E] from the pulley.

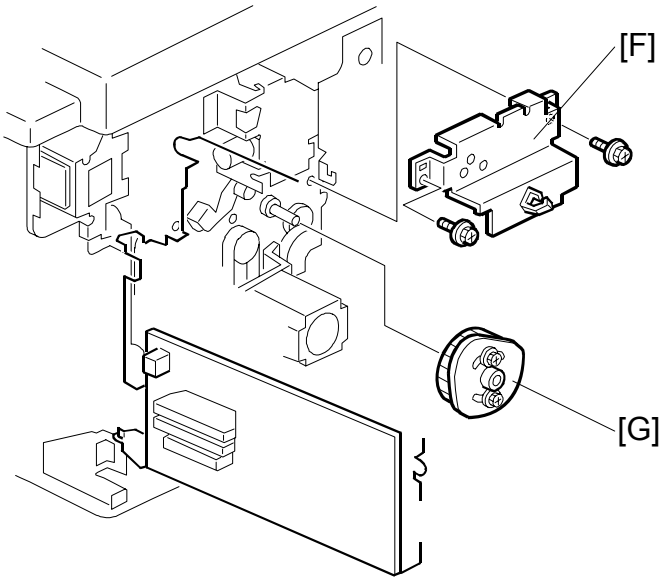

[F]: Lifting cam bracket (🔩 x 2)
[G]: Registration roller lifting cam
NOTE: There is a correct position for the cam. Because of this, when you reinstall the cam, do the registration roller lifting cam position adjustment. (☛ 3.9.13)

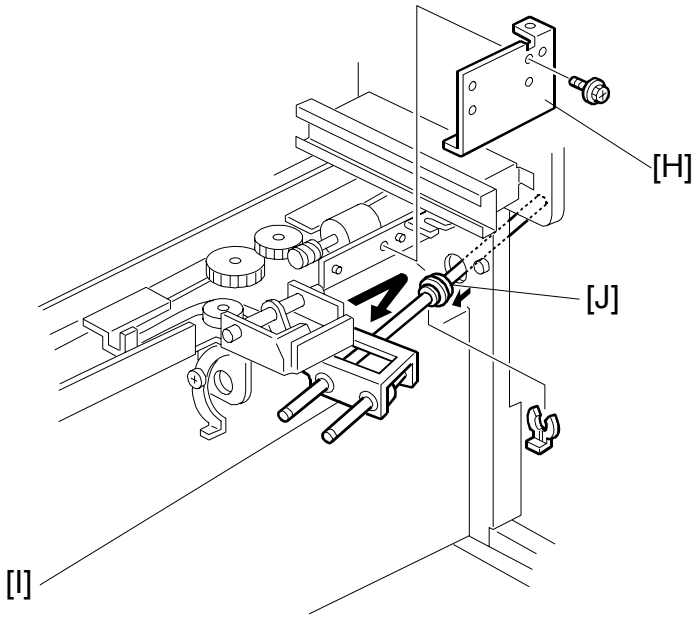

[H]: Right paper guide plate (🔩 x 1)
[I]: Paper feed roller unit (🔩 x 1)
NOTE: Slide the bushing [J] towards the operation side.

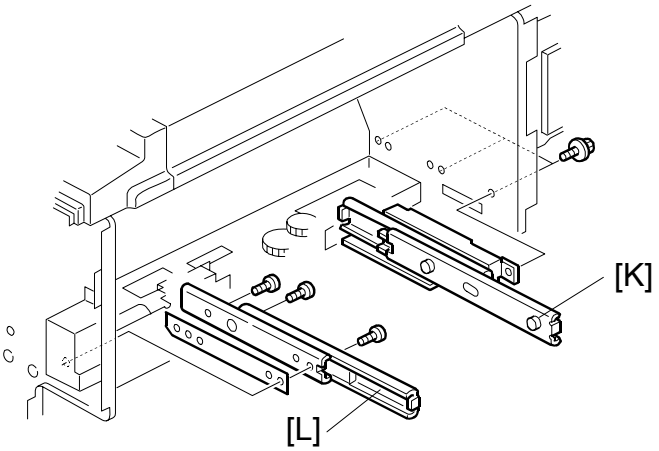

- Front cover, Inner cover, Knob cover (☛ 3.2.1)

[K]: Rear rail bracket (🔩 x 3)

[L]: Front rail bracket (🔩 x 2)

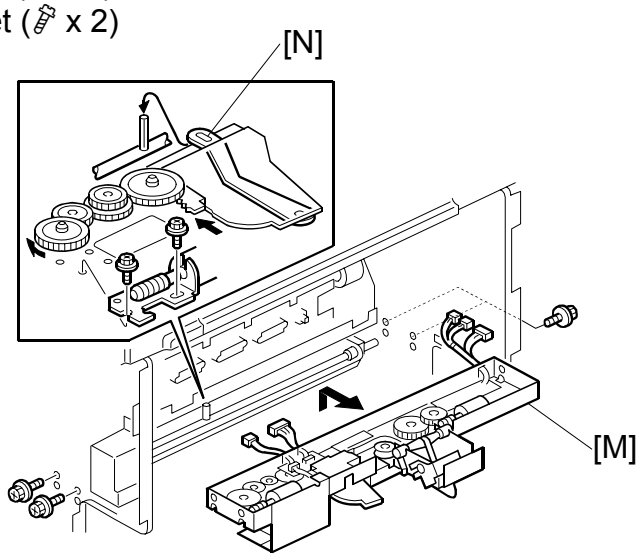

[M]: Feed pressure unit (🔩 x 4, 🖐 x 5)

NOTE: When tightening the feed pressure unit, pass the pin through the small hole in the bracket [N], as shown.

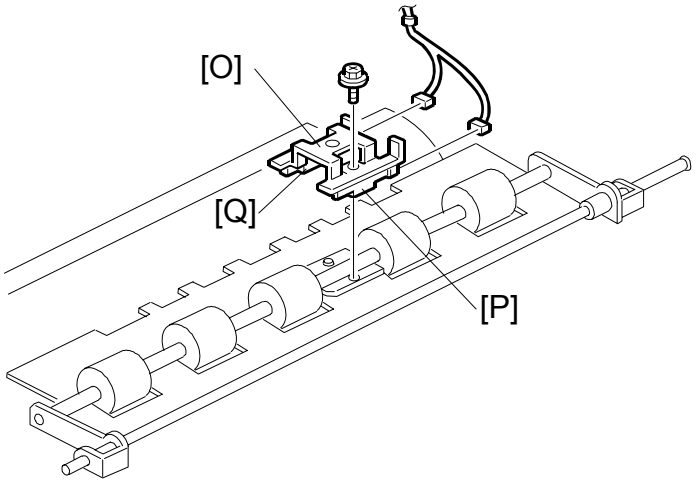

[O]: Sensor bracket (x 1, x 2)
[P]: Paper registration sensor
[Q]: Paper feed timing sensor

3.9.8 UPPER REGISTRATION ROLLER

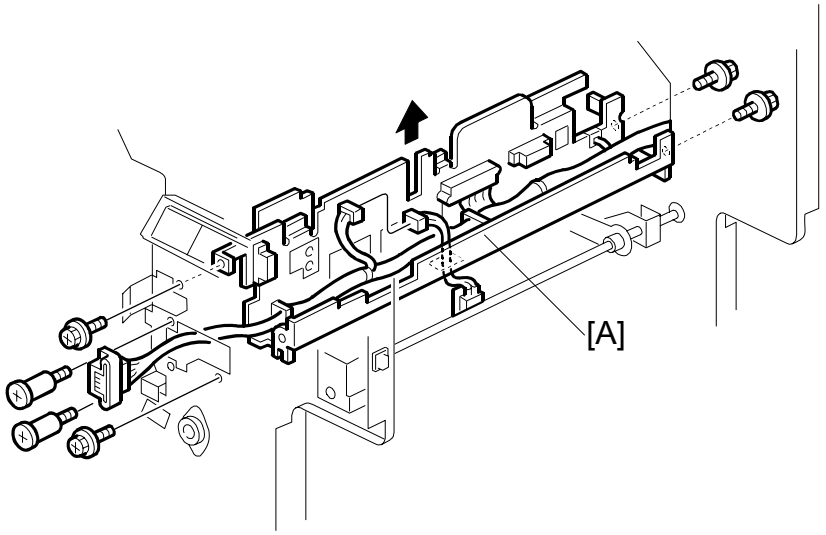

- Paper registration sensor, Paper feed timing sensor (☛ 3.9.7)

[A]: Upper stay (x 5, x 1)

NOTE: Push up the upper stay

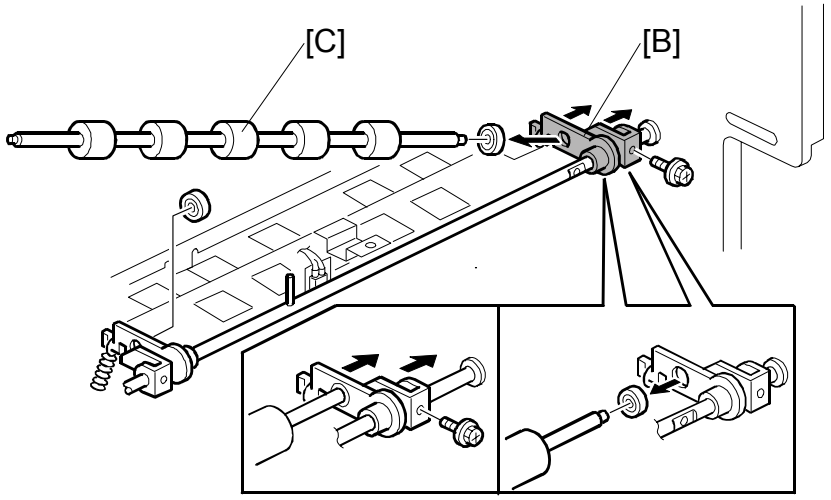

[B]: Upper registration rear bracket

NOTE: Slide the upper registration rear bracket [C] towards the non-operation side.

[C]: Upper registration roller

3.9.9 FRICTION PADS

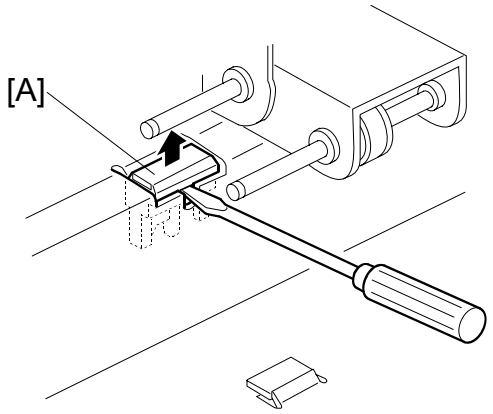

- Pick-up roller, Paper feed roller (☛ 3.9.2)

[A]: Friction pad

NOTE: 1) Friction pad A is the standard friction pad. It is black.
Friction pad B is the 'special' friction pad. It is grey.
If you cannot see the correct friction pad at [A] as shown above, use SP 5-42 to move the necessary pad to [A].
To move friction pad A to the replacement position, turn on the main switch, then access SP 5-42-1, and push the Start key.
To move friction pad B to the replacement position, turn on the main switch, then access SP 5-42-2, and push the Start key.

2) After you install a new friction pad, reset the PM counter:
   - Friction pad A: SP3-4-5
   - Friction pad B: SP3-4-6

3.9.10 SEPARATION PRESSURE DETECTION BOARD, FRICTION PAD SHIFT MOTOR

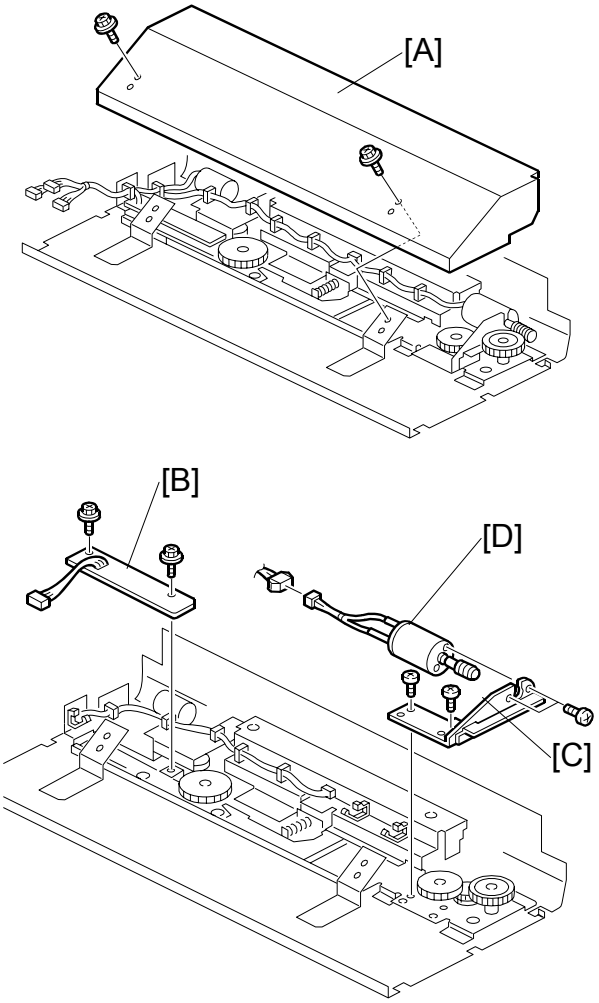

- Paper feed assembly (☛ 3.9.1)

[A]: Friction pad unit cover (🔩 x 2)
[B]: Separation pressure detection board (🔩 x 2)
[C]: Friction pad shift motor bracket (🔩 x 2, 🖐 x 1)
[D]: Friction pad shift motor (🔩 x 2)

3.9.11 SEPARATION PRESSURE MOTOR, FRICTION PAD POSITION SENSORS 1, 2

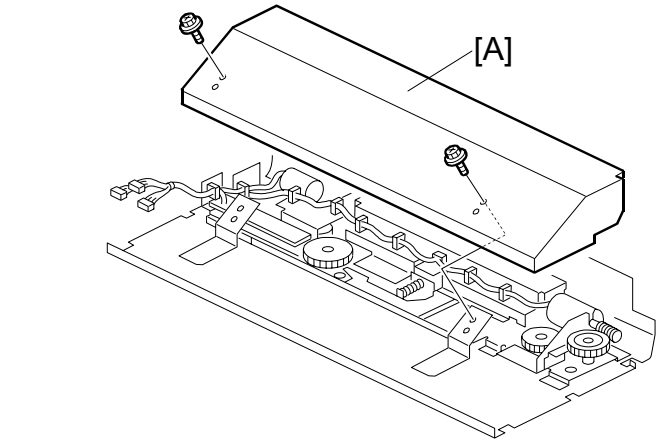

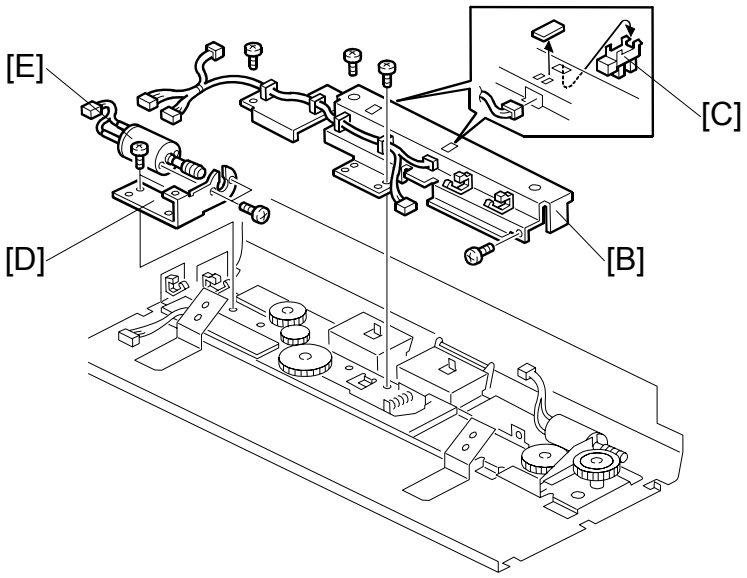

- Paper feed assembly (☛ 3.9.1)

[A]: Friction pad unit cover (🔩 x 2)
[B]: Friction pad position sensor bracket (🔩 x 4, 🖐 x 3)
[C]: Friction pad position sensors 1, 2
[D]: Separation pressure motor bracket (🔩 x 2, 🖐 x 1)
[E]: Separation pressure motor (🔩 x 2)

3.9.12 LOWER REGISTRATION ROLLER

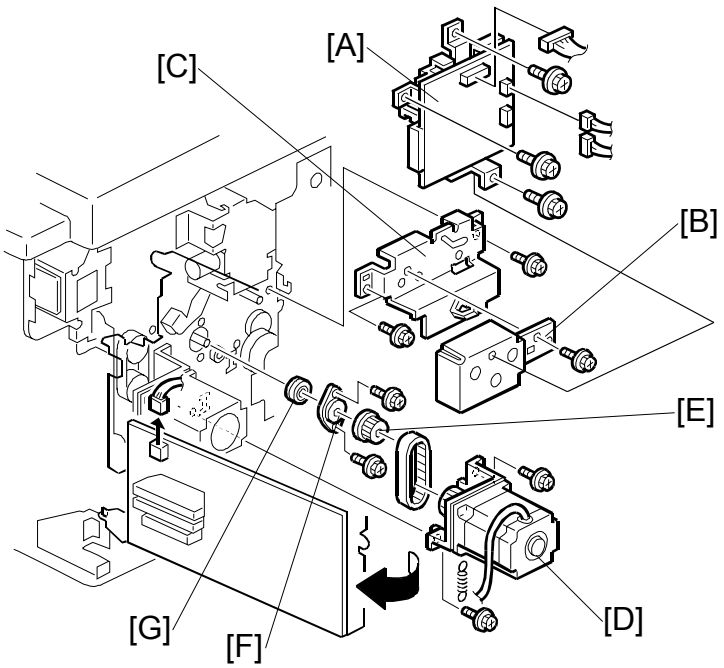

- Front cover, Knob cover, Inner cover (☛ 3.2.1)
- Rear cover, Right rear cover, Right front cover (☛ 3.2.2)
- Open out the ACU - ECU assembly (☛ 3.5.1)
- Pressure cylinder (☛ 3.10.1)

[A]: Double feed detector board (☞ x 3, 🖑 x 3)
[B]: Pulley cover (☞ x 1)
[C]: Lifting cam bracket (☞ x 2)
[D]: Registration motor (☞ x 2, 🖑 x 1)
[E]: Pulley (Allen screw x 2)
[F]: Bearing holder (☞ x 2)
[G]: Bearing

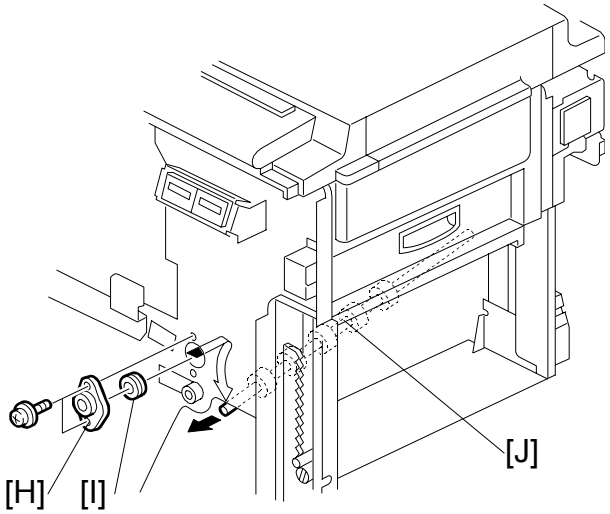

[H]: Bearing holder (x 2)
[I]: Bearing
[J]: Lower registration roller
NOTE: Slide the lower registration roller [J] towards the operation side.

3.9.13 REGISTRATION ROLLER LIFTING CAM POSITION ADJUSTMENT

Purpose: To ensure smooth paper feed from the registration roller to the drum.
NOTE: Make sure that the drum is at home position before the adjustment.

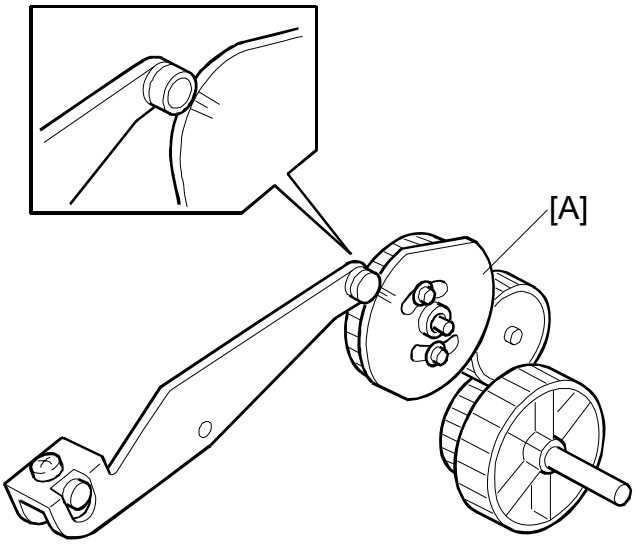

1. When installing the registration roller lifting cam [A] on the shaft, align the cam follower (a bushing) at the center or within one division to the right of the center.
2. If the cam follower cannot be put in the correct place, try to change the gear meshing. Also, try to readjust the position by loosing the screw holding the cam to the gear.
   NOTE: To obtain a perfect adjustment, you must take out any gear play by applying clockwise pressure to the cam (with the gear) during the adjustment.

3.9.14 DOUBLE FEED SENSOR ADJUSTMENT

Purpose: To ensure that the sensor detects paper double feeds.

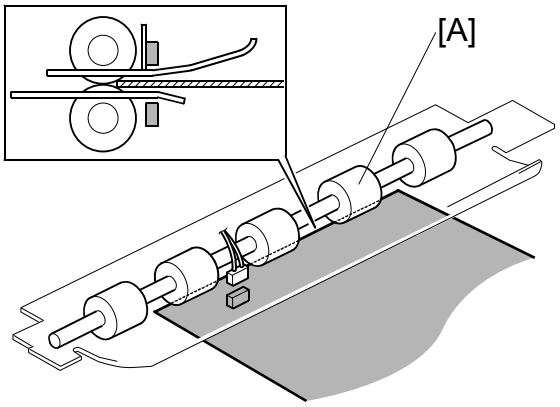

- Rear cover (☛ 3.2.2)
- Open out the ACU - ECU assembly (☛ 3.5.1)

1. Turn on the main switch.
2. Feed a sheet of the customer's typical print paper from the paper feed table into the machine until the leading edge runs against the feed roller [A].

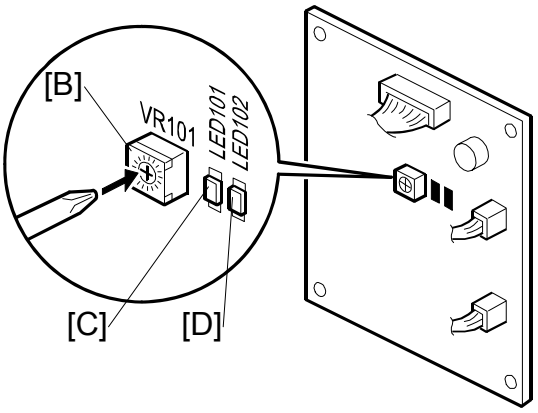

3. Turn VR101 [B] clockwise until LED101 [C] on the double feed detection board lights.
4. Turn VR101 [B] counterclockwise until both LED101 [C] and LED102 [D] turn on.
5. Turn VR101 [B] counterclockwise until LED102 [D] turns off.

3.9.15 TIMING BELT TENSION ADJUSTMENT FOR THE PAPER FEED MOTOR

Purpose: To ensure smooth paper feed.

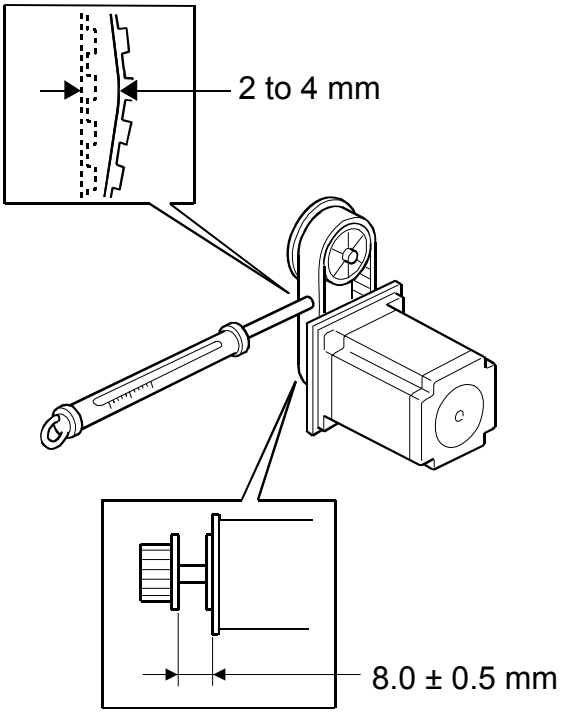

1. Make sure that the distance between the motor and the flange is 8.0 ± 0.5mm.
2. Apply a 500g load to the center of the belt using a tension gauge. Make sure that the belt deflects between 2 to 4 mm. If the tension is incorrect, move the motor up or down.

3.9.16 TIMING BELT TENSION ADJUSTMENT FOR THE REGISTRATION MOTOR

Purpose: To ensure smooth paper feed.

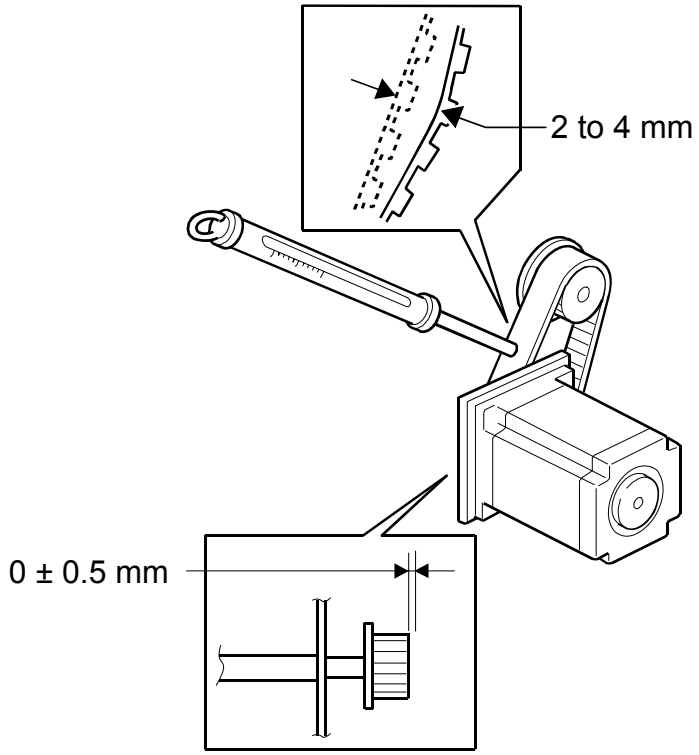

1. Make sure that the distance between the end of the lower registration roller shaft and the edge of the pulley is 0 ± 0.5 mm.
2. Apply a 500g load to the center of the belt using a tension gauge. Make sure that the belt deflects between 2 to 4 mm. If the tension is correct, move the motor up or down.

3.9.17 PAPER FEED AND SEPARATION PRESSURE ADJUSTMENT

Paper feed pressure adjustment

Purpose: To ensure smooth paper feed from the paper table.

- The user has a choice of three different settings for the paper feed pressure (Standard, Frequent, Very Frequent). The user sets this between jobs depending on how often they think no-feed errors are occurring.
- The setting is returned to the default by pressing the Clear Modes key or turning the main switch off and back on. The default setting is “Standard”.
- The pressure applied for each setting can be adjusted by SP mode.

1. Select SP mode “6-009-1”, “6-009-2” and “6-009-3”.
   NOTE: SP6-009-10, 11, 12 are for special paper types (basically for envelopes), SP6-009-1, 2, 3 are for standard paper types, and SP6-009-4, 5, 6 are for thick paper. If the user has programmed as User 1 or User 2, you can change the paper feed pressures with SP6-009-13, 14, 15 and SP6-009-16, 17, 18.
2. Change the settings as necessary.
   - Defaults for SP6-009-1 (Standard): 3, SP6-009-2 (Frequent): 5, SP6-009-3 (Very Frequent): 6
   - The available pressure levels are from 0 to 6. (0 is the weakest, 6 is the strongest.)

Paper separation pressure adjustment

Purpose: To ensure paper separation.

- The user has a choice of three different settings for the separation pressure (Standard, Frequent, Very Frequent). The user sets this between jobs depending on how often they think multi-feed errors are occurring.
- The setting is returned to the default by pressing the Clear Modes key or turning the main switch off and back on. The default setting is “Standard”.
- The pressure applied for each setting can be adjusted by SP mode.

1. Select SP mode “6-010-1”, “6-010-2” and “6-010-3”.
   NOTE: SP6-010-10, 11, 12 are for special paper types, SP6-010-1, 2, 3 are for standard paper types, and SP6-010-4, 5, 6 are for thick paper. If the user has programmed as User 1 or User 2, you can change the paper feed pressures with SP6-010-13, 14, 15 and SP6-10-16, 17, 18.
2. Change the settings as necessary.
   - Defaults for SP6-010-1 (Standard): 4, SP6-010-2 (Frequent): 5, SP6-010-3 (Very Frequent): 6
   - The available pressure levels are from 0 to 6. (0 is the weakest, 6 is the strongest.)

3.9.18 PAPER FEED LENGTH ADJUSTMENT

Paper Feed Motor Stop Timing Adjustment

PURPOSE: To ensure that the paper reaches the registration roller properly. Changing the paper feed motor stop timing with SP6-031-2 changes the paper feed length for the paper feed roller.

CAUTION: Do not change SP6-014 and 6-015 (these change the paper feed start timing).

Procedure - Main Body

1. Turn on the main switch, then access the SP mode.
2. Enter SP6-031-2.
3. Increase or decrease the value on the display.
   NOTE: 1) Before changing the value, check the current setting, in case you need to recover the previous setting. (Default for SP6-031-2 – "21")
   2) Changing the value by +1 increases the paper feed motor's on-time and feeds the paper an extra 0.3 mm.
4. Leave the SP mode, then check the paper feed performance. If the problem still occurs, repeat the above steps.

Procedure – LCIT

1. Turn on the main switch, then access the SP mode.
2. Enter SP6-031-3.
3. Increase or decrease the value on the display.
   NOTE: 3) Before changing the value, check the current setting, in case you need to recover the previous setting. (Default for SP6-031-3 – "13")
   4) Changing the value by +1 increases the paper feed motor's on-time and feeds the paper an extra 0.3 mm.
4. Leave the SP mode, then check the paper feed performance. If the problem still occurs, repeat the above steps.

If both the LCIT and the Main Body have the same problem

1. If SP 6-31-2 and/or SP 6-31-3 are adjusted to the maximum range, but the problem still occurs, adjust SP 6-31-8.

Paper Clamping Timing Adjustment

PURPOSE: To ensure that the paper reaches the paper clamper on the pressure cylinder properly. Changing the paper clamping timing with SP6-027 to 29 changes the paper feed length for the paper registration roller.

CAUTION: Do not change SP6-020 to 6-024 (these change the registration motor start timing). In addition, do not change SP6-031-1, -4, -5, or -6.

PROCEDURE:

1. Turn on the main switch, then access the SP mode.
2. Enter SP6-027-1 to 8 (Paper Clamp Timing Pulse).
   NOTE: The paper clamping timing depends on the paper type selected at the operation panel, and the print speed. SP6-027-1 to 8 are the adjustment for normal paper only. For thick paper, use SP6-028-1 to 8.
3. Increase or decrease the value on the display.
   NOTE: 1) Before changing the value, check the current setting, in case you need to recover the previous setting.
   2) Changing the value by +1 decreases the registration motor's on-time and feeds the paper 0.3 mm less.
4. Leave the SP mode, then check the paper feed performance. If the problem still occurs, repeat the above steps.

3.10 PRINTING SECTION

3.10.1 PRESSURE CYLINDER, PAPER CLAMPER

NOTE: Take care when removing and replacing the pressure cylinder, because the pressure cylinder is made of soft rubber. Also, the encoder in the rear of the pressure cylinder is easily damaged.

Removal procedure

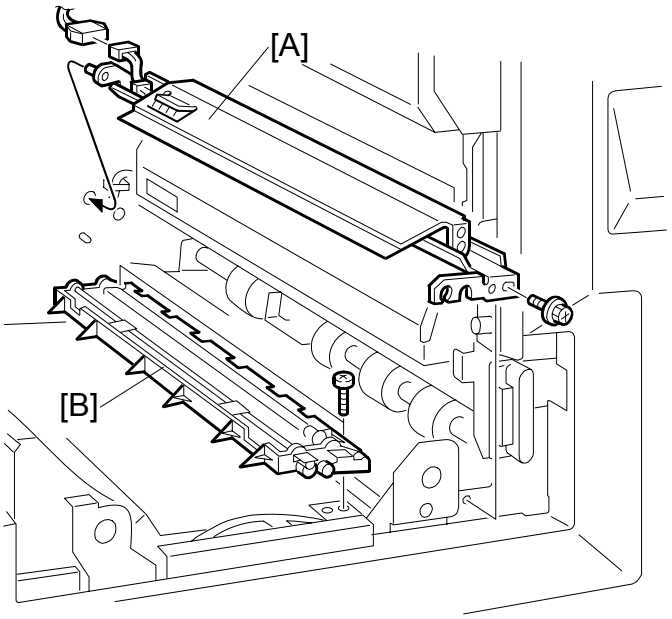

- Drum unit (☛ 3.8.1)
- Left cover (☛ 3.2.2)
- Paper delivery unit (☛ 3.12.2)
- Air knife fan unit (☛ 3.12.2)
- Paper exit pawl (☛ 3.12.1)

[A]: 1st drum master sensor bracket (x 1, x 1)
[B]: Paper clamper (x 2)

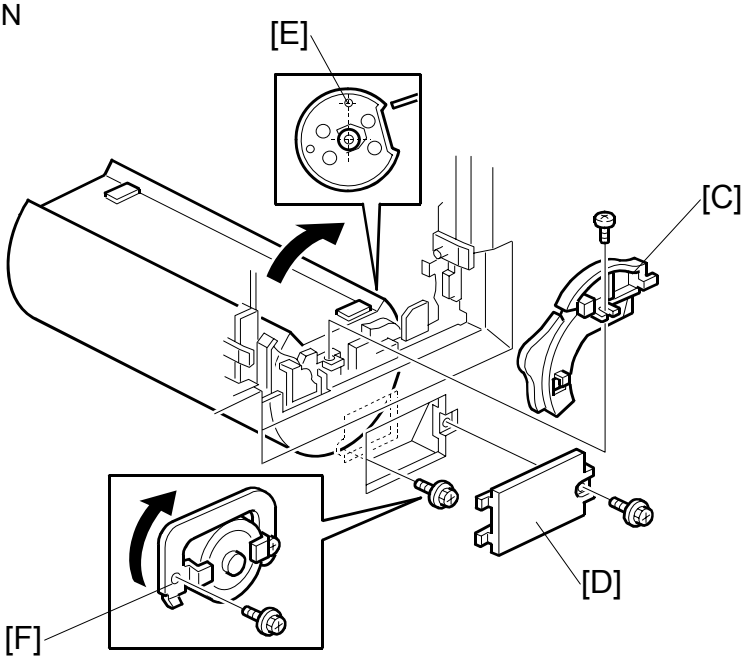

[C]: White cam (🔩 x 1)
[D]: Cover (🔩 x 1)

1. Turn the pressure cylinder clockwise 80 degrees, so that the positioning hole [E] in the side of the pressure cylinder is at the top.(The flat part of the pressure cylinder faces towards the upper right, as shown.)
2. Remove the screw and flip over the stopper [F] from left to right.

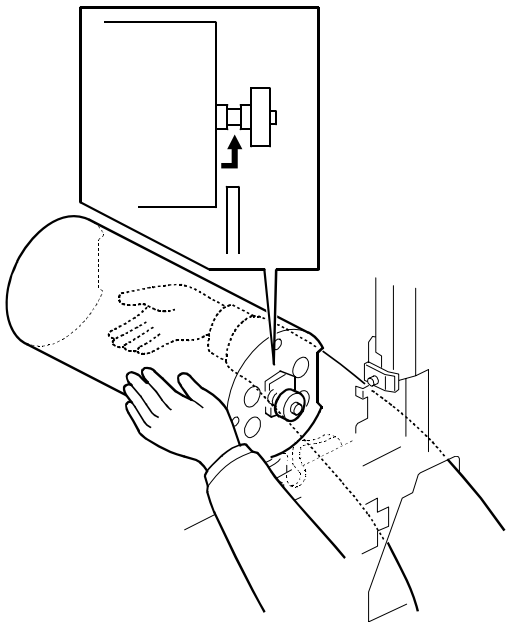

3. Put the right hand into the side trapezoid hole (for removing lower wrapping jams), and support the bottom of the cylinder.

4. Pull it a little toward you (to disengage the join behind the cylinder). Then, push up to the drum position.

CAUTION: There is an encoder plate at the rear of the pressure cylinder. Be careful not to damage it when removing the pressure cylinder.

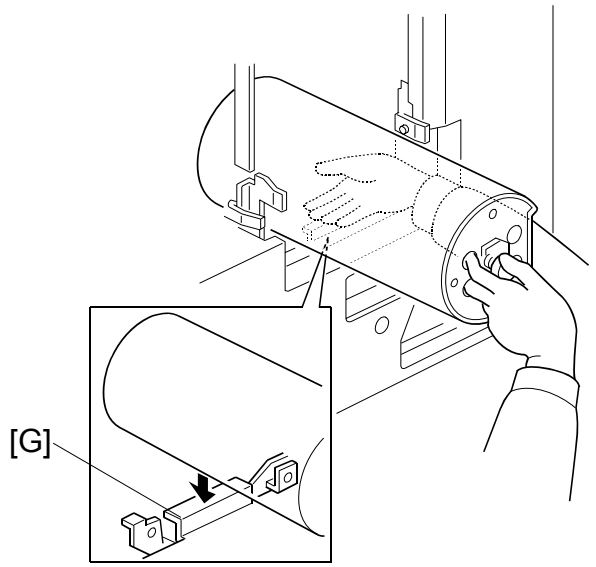

5. Pull the pressure cylinder toward you, and put it on the flat area of the inner cover [G].
6. With the left hand, hold the bearing tightly, putting fingers into the holes as shown.
7. Support the rear of the pressure cylinder with the right hand. Then, bring out the cylinder using both hands.

Reinstallation procedure

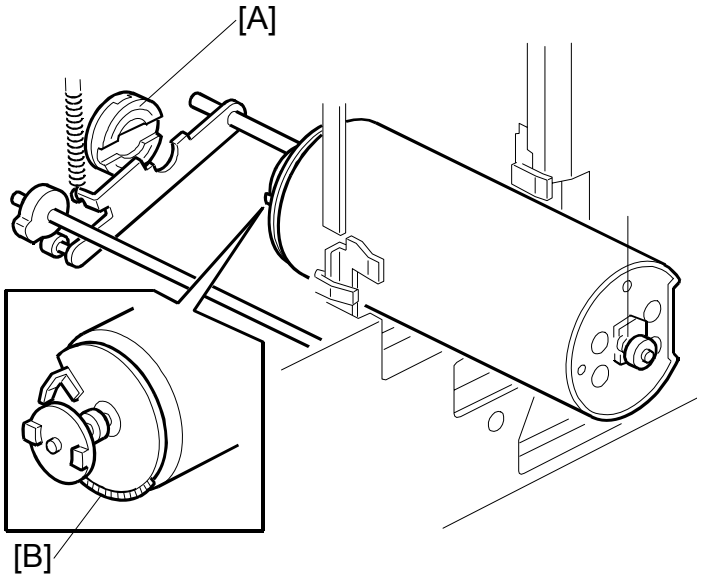

CAUTION: Take care not to turn the drive accidentally after removing the pressure cylinder. When the drive is in position, the cutout (for engagement) in the drive conductor (white disk) [A] is positioned horizontally but leans to the upper right just slightly.

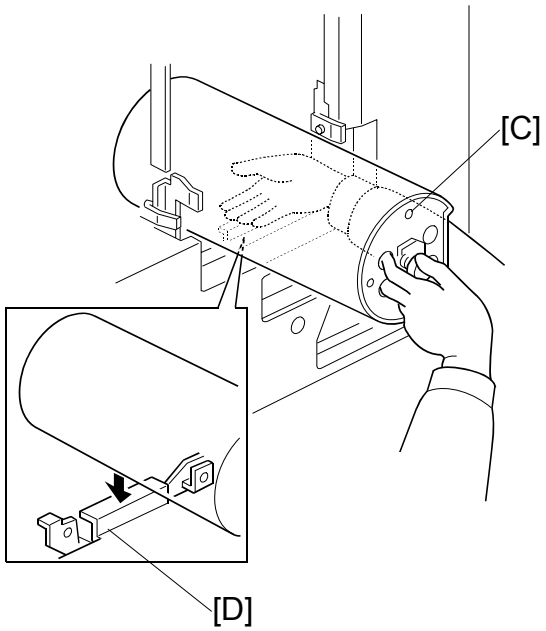

1. Hold the pressure cylinder so that the round hole [C] is uppermost. Rest the pressure cylinder on the flat area of the inner cover [D].
   NOTE: There is an encoder plate [B] at the rear of the pressure cylinder. Be careful not to damage it when installing the pressure cylinder.
2. White the left hand, hold the bearing tightly, putting fingers into the holes as shown.

3. Support the rear of the pressure cylinder with the right hand into the side trapezoid hole (for removing lower wrapping jams), and support the bottom of the pressure cylinder.

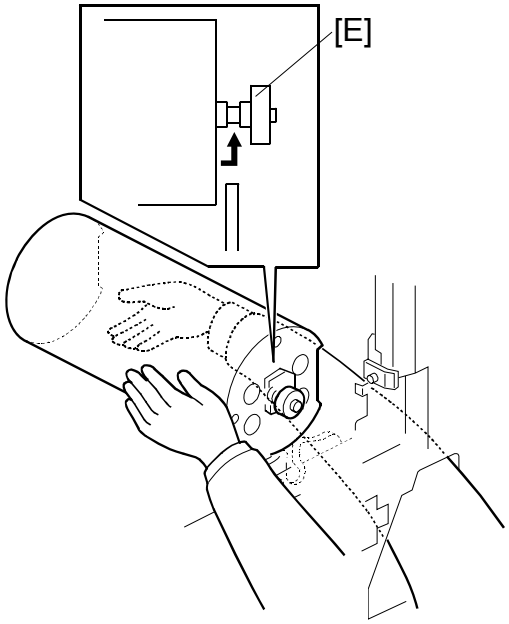

4. Then, put the pressure cylinder into the hole where the drum was. Use both hands.
5. Install the pressure cylinder, while positioning the thinnest part of the shaft of the bearing [E] with the clamper cam (the black cam) as shown above. Position the bearing [E] on the bearing holder.

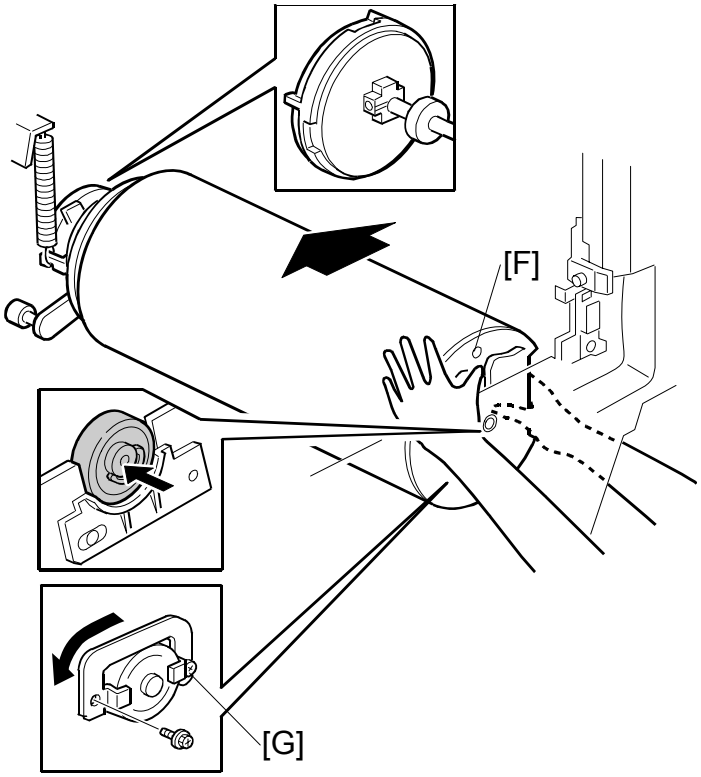

6. While the round hole [F] is uppermost, push the pressure cylinder towards the non-operation side (to engage the join behind the cylinder).
   NOTE: 1) If it cannot enter, push while turning the pressure cylinder a little. Check if the joint is engaged properly by turning the pressure cylinder slightly.
   2) Set the bearing stopper [G] as shown.

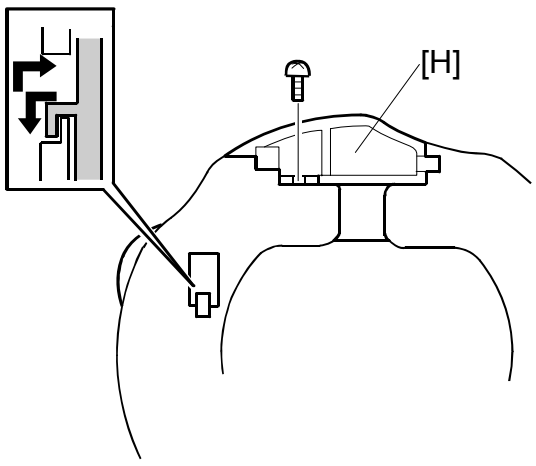

7. Install the white cam [H] as shown.
8. Reassemble the machine.

After you install a new paper clamper, reset the counter for this part with SP 3-4-2.

3.10.2 FEED ENCODER, FEED START SENSOR, FEED ENCODER HARNESS, FEED ENCODER CLEANING BRUSH

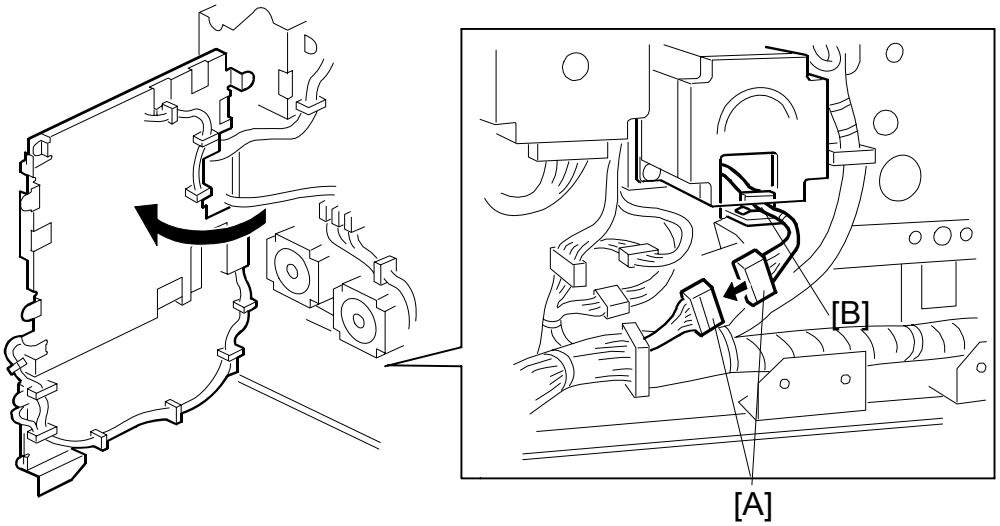

- Drum unit (☛ 3.8.1)
- Rear cover (☛ 3.2.2)
- Open out the ACU - ECU assembly (☛ 3.5.1)

1. Disconnect the connector [A] from the rear of the machine (1 clamp [B]).

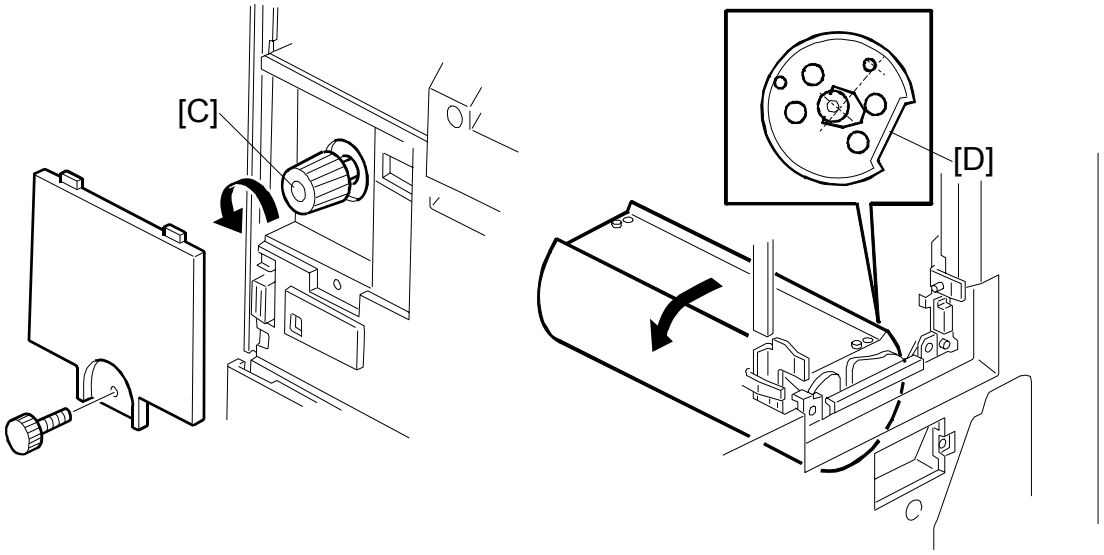

[C]: Knob cover (🔩 x 1)

2. Turn the knob [C] until the flat part of the cylinder [D] is in the position shown.

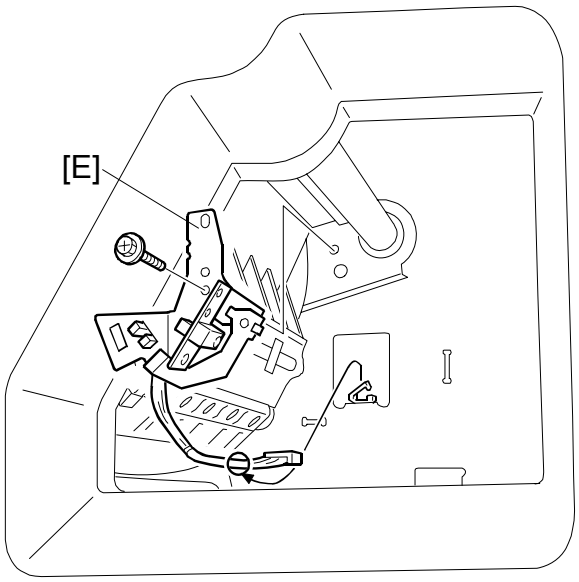

[E]: Feed encoder bracket (🔩 x 1)

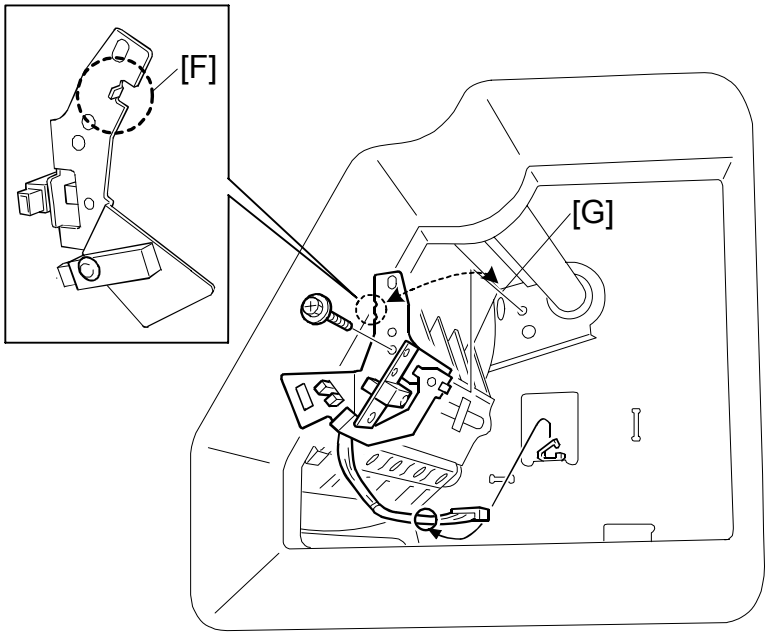

NOTE: When re-installing the feed encoder bracket [E], make sure to put the hook [F] on the feed encoder bracket in the correct place on the main body [G] (attach the hook exactly at the corner).

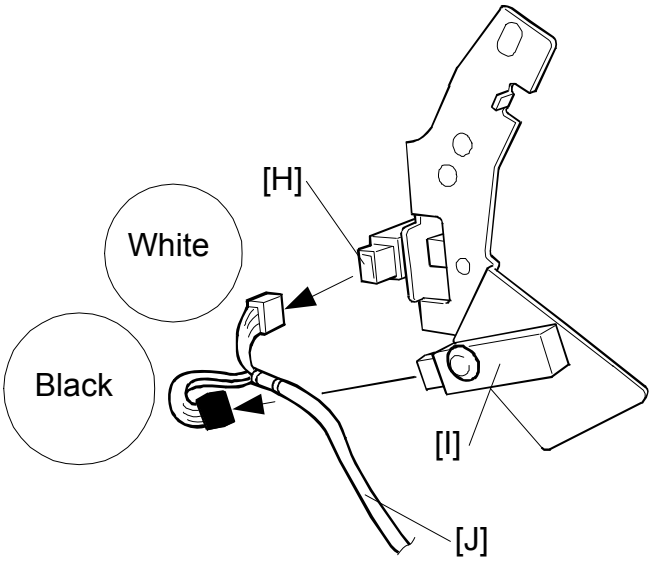

[H]: Feed encoder (x 1)
[I]: Feed start sensor (x 1)
[J]: Feed encoder harness (the white connector goes to the feed encoder [H], and the black connector goes to the feed start sensor [I])

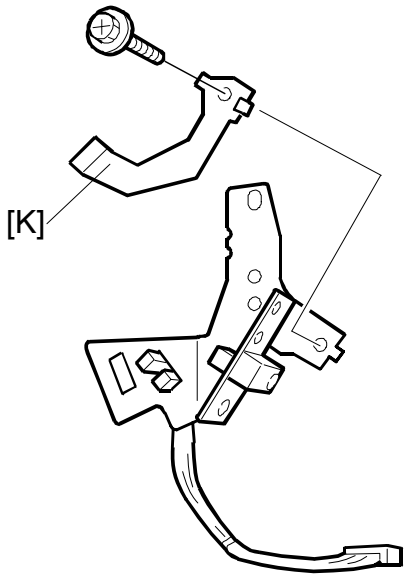

[K]: Feed encoder cleaning brush

3.10.3 1ST DRUM MASTER SENSOR

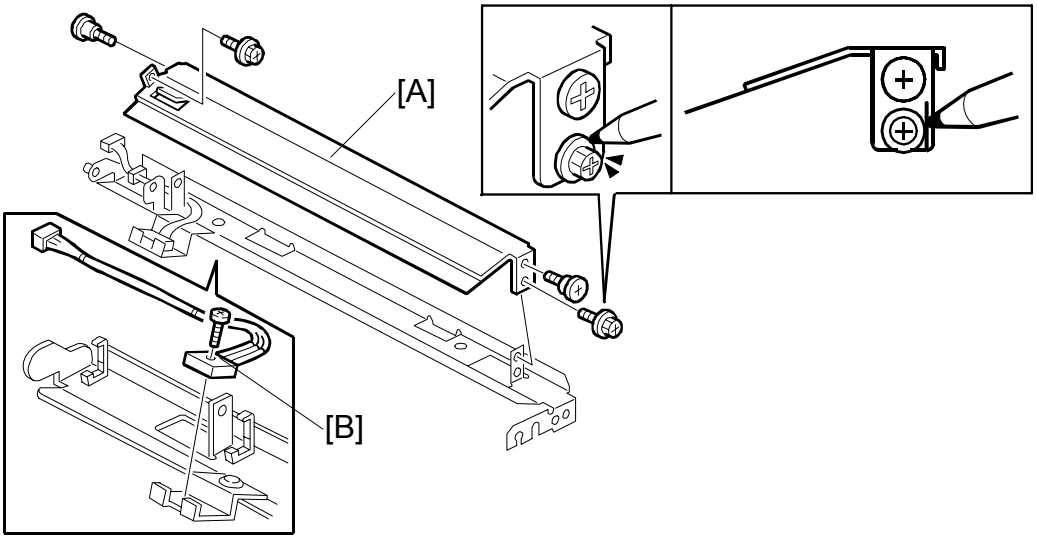

- Drum unit (☛ 3.8.1)
- 1st drum master sensor bracket (☛ 3.10.1)

[A]: 1st drum master sensor guide (x 4)

NOTE: Before you remove the bracket, make a mark on the screw and the bracket. This will show you how much to tighten the screw before you do the 1st drum master sensor guide adjustment.
After you re-install the 1st drum sensor guide, do the 1st drum master sensor guide adjustment (☛ 3.10.4)

[B]: 1st drum master sensor (x 1, x 1)

NOTE: Do the 1st drum master sensor adjustment (☛ 3.8.9) after installing the new 1st drum master sensor.

3.10.4 1ST DRUM MASTER SENSOR GUIDE ADJUSTMENT

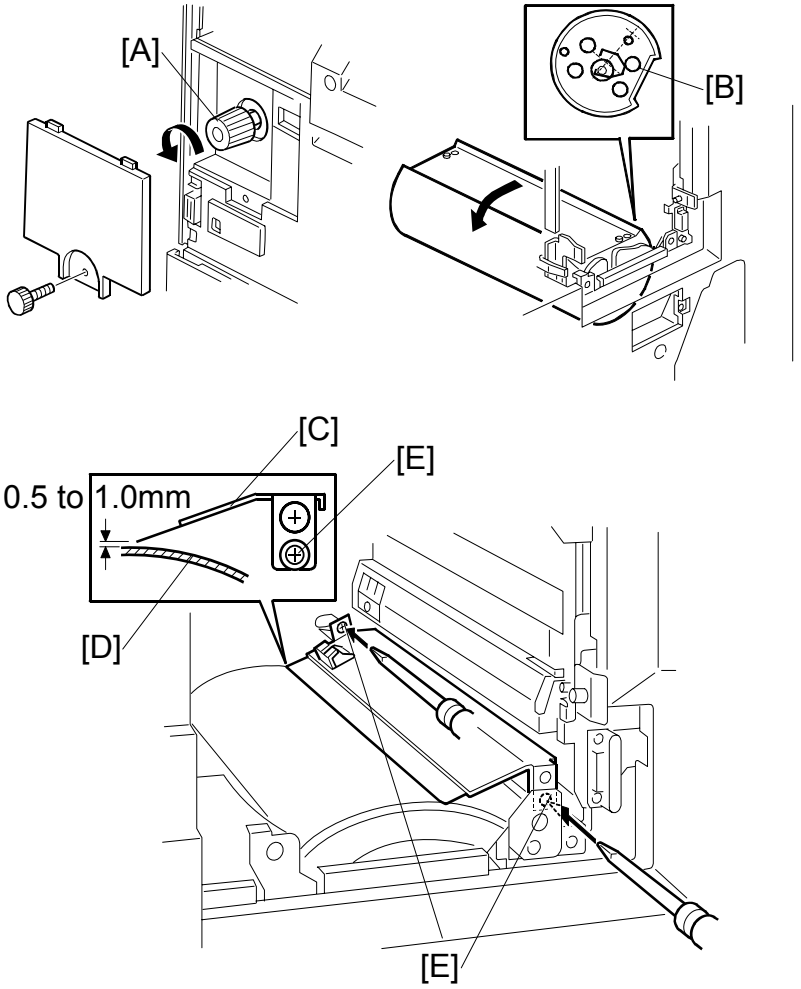

- Drum unit (☛ 3.8.1)
- Knob cover (☛ 3.2.1)

1. Apply the printing pressure as follows, to push the pressure cylinder up to the printing position.
   1) Access SP5-64-2 for the printing pressure release solenoid, and select "Start".
   2) Turn the knob [A] until the flat part of the cylinder [B] is in the position shown.
   3) Leave SP mode.
2. Adjust the clearance between the 1st drum master sensor guide [C] and the surface of the pressure cylinder [D] until it is 0.5 to 1.0 mm (loosen the 2 screws [E]).

3.10.5 PRINTING PRESSURE HP SENSOR, PRINTING PRESSURE POSITION SENSOR, PRESSURE CAM SHIFT MOTOR

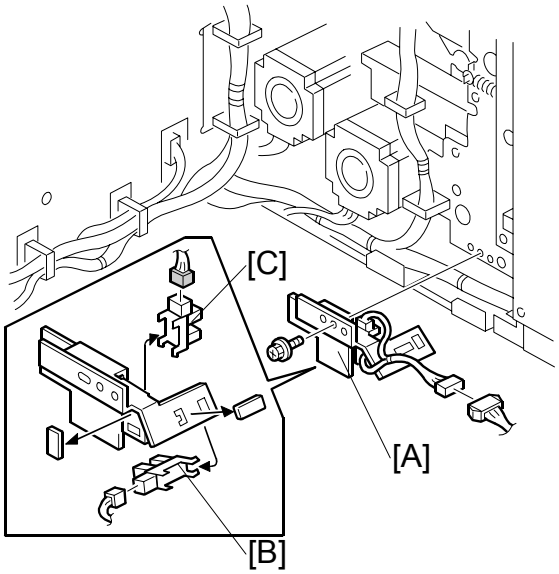

- Rear cover (☛ 3.2.2)
- ECU (☛ 3.5.1)

[A]: Printing pressure sensor bracket (🔩 x 1, 🖐 x 1)
[B]: Printing pressure position sensor (🖐 x 1)
[C]: Printing pressure HP sensor (🖐 x 1)

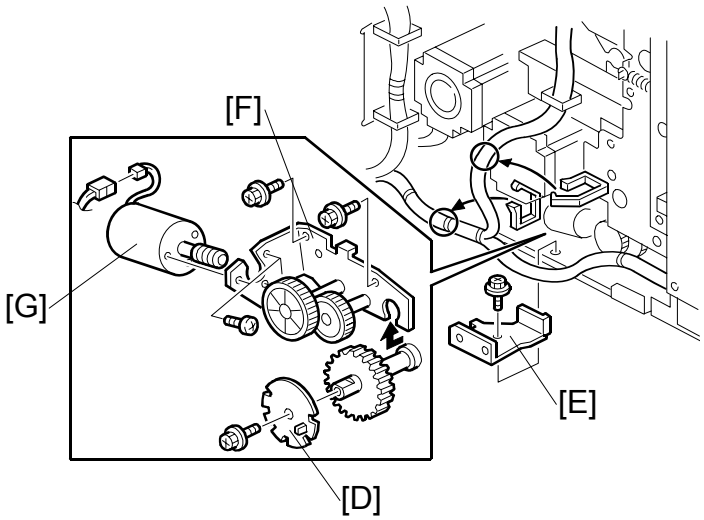

[D]: Encoder (🖐 x 1)
[E]: Bracket (🔩 x 1)
[F]: Print pressure adjustment motor unit (🔩 x 2, 🖐 x 1)
[G]: Print pressure adjustment motor (🔩 x 3)

3.10.6 PRINTING PRESSURE ADJUSTMENT

Purpose: To improve the print results.

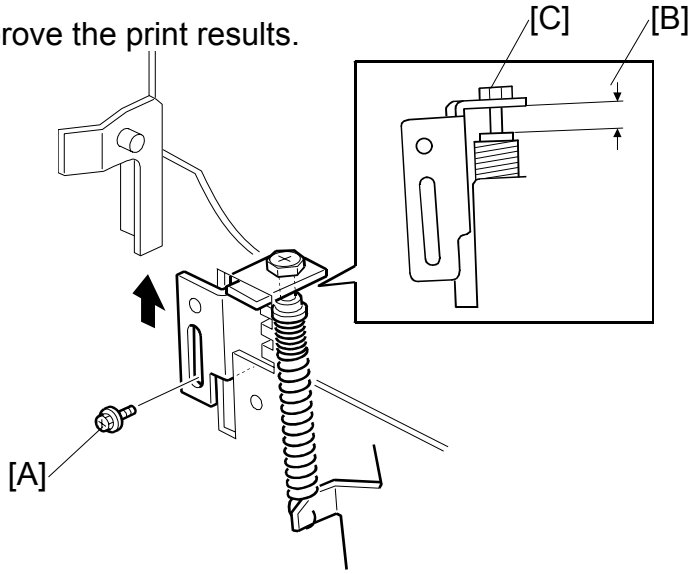

1. Move the printing pressure bracket to its highest position, then tighten the screw [A].
2. Adjust the clearance [B] to 14.5 ± 0.3 mm by turning the bolt [C].

3.10.7 PRINTING PRESSURE RELEASE ARM GAP ADJUSTMENT

Purpose: To ensure that the printing pressure lever is disengaged when the printing pressure release solenoid is energized.

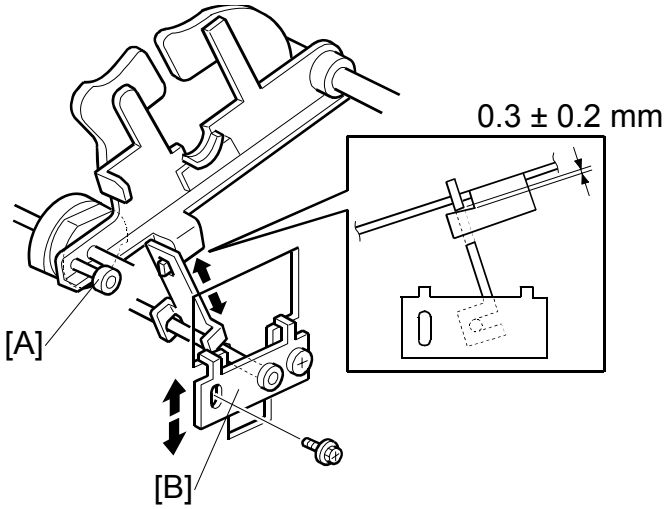

1. Rotate the printing pressure cams so that the arm moves to the lowest position.
   NOTE: Use the main drive rotation knob. When the top of the cam meets the bearing [A] while turning the knob, the arm is at the lowest position.
2. Adjust the clearance between the hook and the printing pressure release arm by moving the bracket [B] up and down. The clearance must be 0.3 ± 0.2 mm.
3. Do the same at the non-operation side.

3.11 MAIN DRIVE AND IMAGE UP/DOWN SHIFTING DRIVE SECTION

3.11.1 MAIN MOTOR AND TORQUE LIMITER

Removal Procedure

1. Turn off the main switch and disconnect the power plug. Then remove the following parts.

   - Drum unit (☛ 3.8.1)
   - Rear cover (☛ 3.2.2)
   - Left cover (☛ 3.2.2)
   - Paper delivery unit (☛ 3.12.2)
   - Air knife fan unit (☛ 3.12.2)
   - Job separator unit (☛ 3.12.3)

-From the rear-

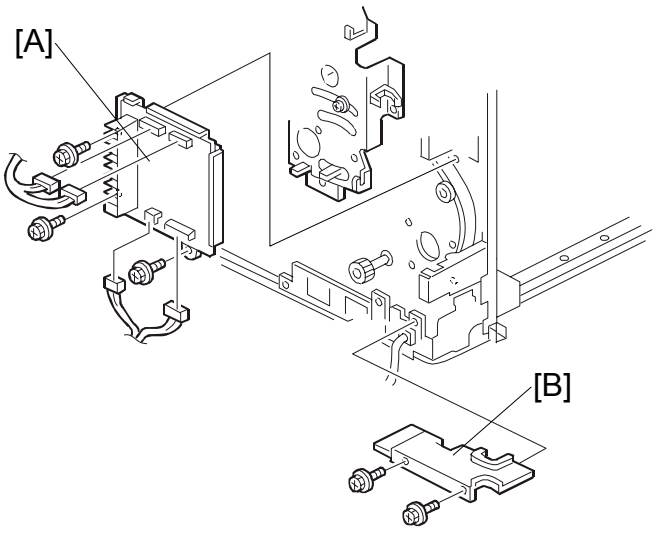

2. Swing out the PSU (☛ 3.5.1).
3. Remove the main motor control board [A] (x 3, x 4).
4. Remove the wire protection cover [B] (x 2).

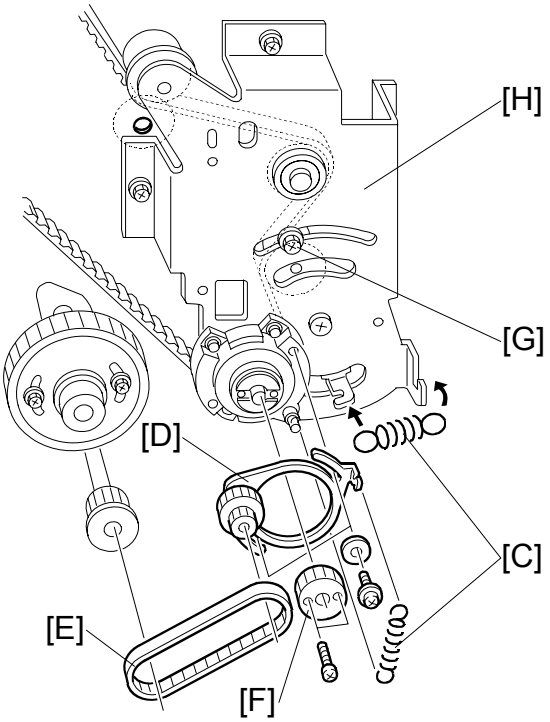

5. Remove the 2 springs [C].
6. Remove the pulley bracket [D] (🔩 x 2).
7. Remove the timing belt [E].
8. Remove the gear [F] (🔩 x 2).
9. Loosen the screw [G].
10. Remove the bracket [H] (🔩 x 5, Cord clamp x 2, Bearing x 2).
    NOTE: One of the screws is under the main wire harness. Take care not to damage the wire harness when you remove it.

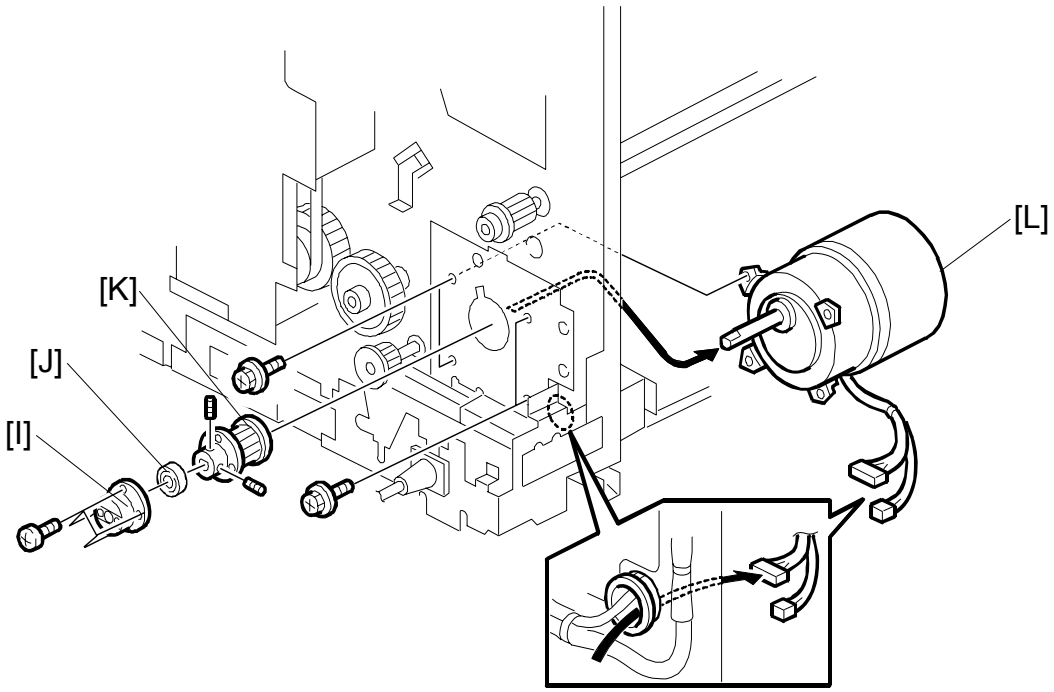

11. Remove the bracket [I] (🔩 x 4).
12. Remove the bearing [J].
13. Remove the torque limiter [K] (Hexagon bolt x 2).
14. Remove the main motor [L] (🔩 x 4).

Reinstallation Procedure

CAUTION: After you replace the main motor, you must adjust the exit pawl drive timing. (☛ 3.12.6 Paper exit pawl drive timing adjustment.) The following procedure shows the correct time to do this.

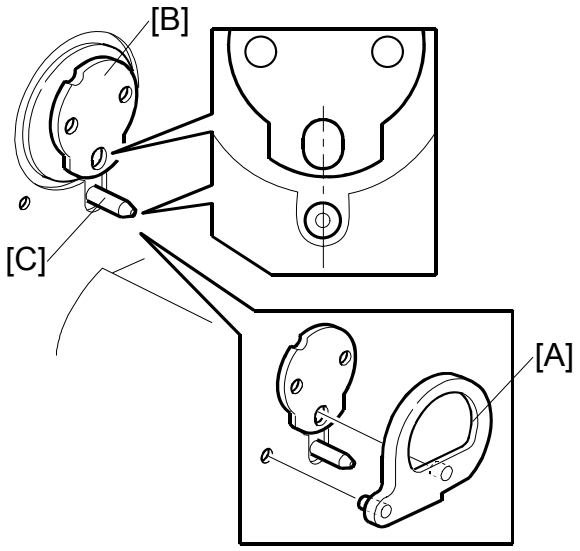

1. Make sure that the drum drive disk is in the home position by setting the drum drive securing tool [A].
   NOTE: 1) The tools are available as a service part. The part number is #C2299000 (three parts as set).
   2) If the special tool is not available, align the elongated hole in the drum drive disk [B] with the shaft [C] below it, as shown.

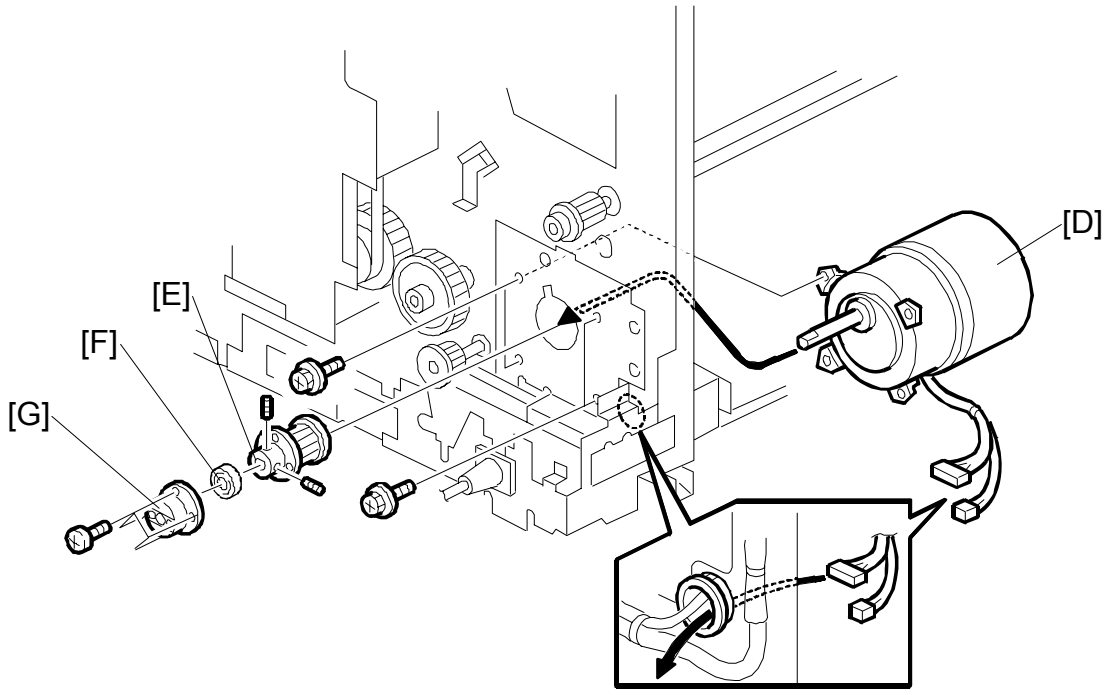

2. Install the main motor [D] (🔩 x 4).
3. Install the torque limiter [E] (Hexagon bolt x 2).
4. Install the bearing [F].
5. Install the bracket [G] (🔩 x 4).

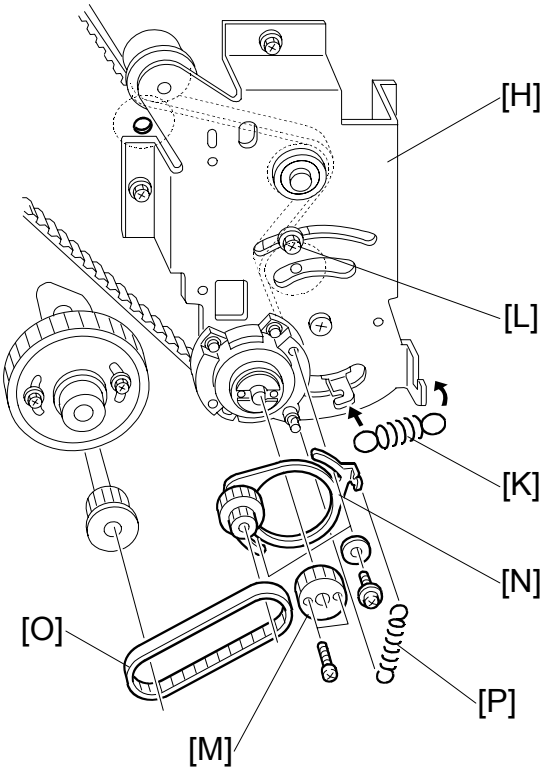

6. Install the bracket [H] (🔩 x 5, Cord clamp x 2, Bearing x 2).

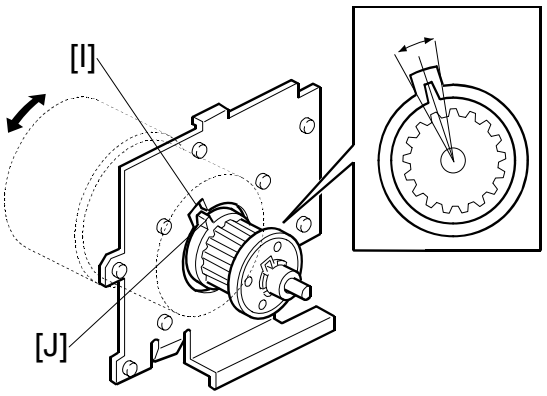

7. Align the cutout in the bracket [I] with the pawl on the torque limiter [J] as shown.
8. Attach the spring [K] and secure the screw [L].
   NOTE: If the cutout and pawl are in line, the main motor drive is OK. If they are not, remove the spring [K], then make sure that the cutout and pawl are in line again.
9. Install the gear [M] (🔩 x 2).
10. Install the pulley bracket [N] and the timing belt [O] (🔩 x 2).
11. Install the spring [P].

12. Adjust the exit pawl drive timing. (☛ 3.12.6 Paper exit pawl drive timing adjustment.)

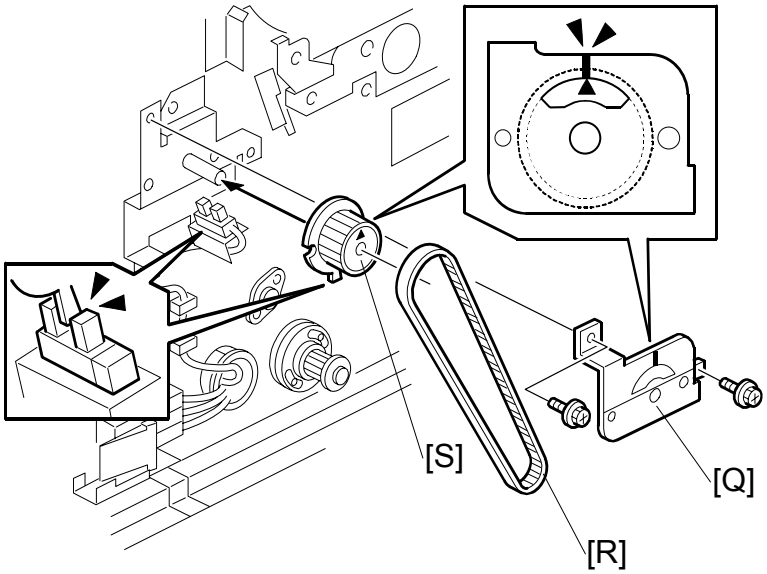

13. Remove the indicator disk bracket [Q] and the timing belt [R] (🔩 x 2).
14. Install the indicator disk bracket [Q] and the timing belt [R] when the line and arrow on the indicator disk [S] are in line (🔩 x 2), and the actuator is in the sensor, as shown in the diagram.

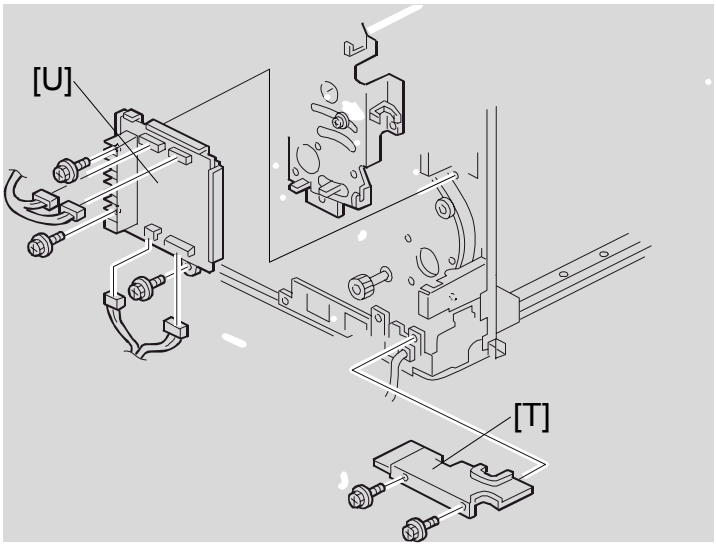

15. Install the wire protection cover [T] (🔩 x 2).
16. Install the main motor control board [U] (🔩 x 3, 🖐 x 4).

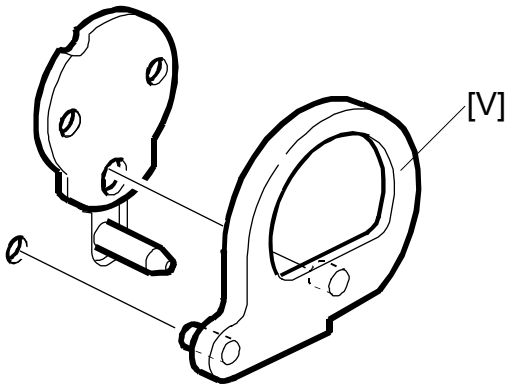

17. Remove the drum drive securing tool [V].
18. Install the PSU (☛ 3.5.3).
19. Install the job separator unit (☛ 3.12.3).
20. Install the paper delivery unit (☛ 3.12.2).
21. Install the air knife fan unit (☛ 3.12.2).
22. Install the paper delivery cover (☛ 3.12.2).
23. Install the left cover (☛ 3.2.2).
24. Install the rear cover (☛ 3.2.2).
25. Install the drum unit (☛ 3.8.1).

3.11.2 MAIN DRIVE MECHANISM (MAIN DRIVE TIMING BELT)

Disassembly Procedure

1. Turn off the main switch and disconnect the power plug. Then remove this part.
   - Rear cover (☛ 3.2.2)

2. Swing out the ACU-ECU assembly and PSU (☛ 3.5.1).

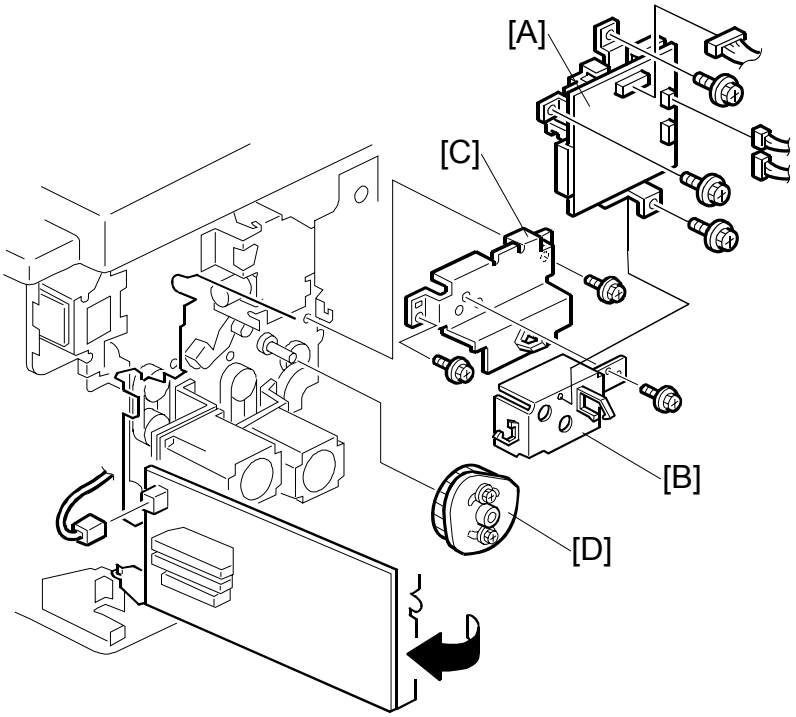

3. Remove the double feed detector board [A], the motor cover [B] and the lifting cam bracket [C].
4. Remove the registration roller lifting cam [D].

- From the rear -

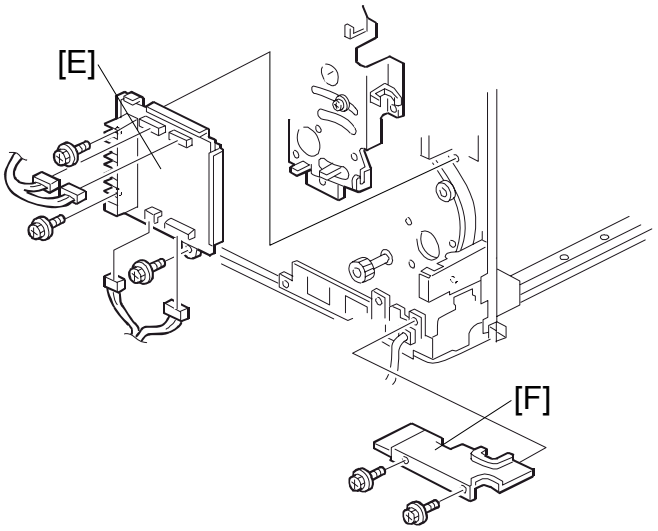

5. Remove the main motor control board [E] (x 3, x 4).
6. Remove the wire protection cover [F] (x 2).

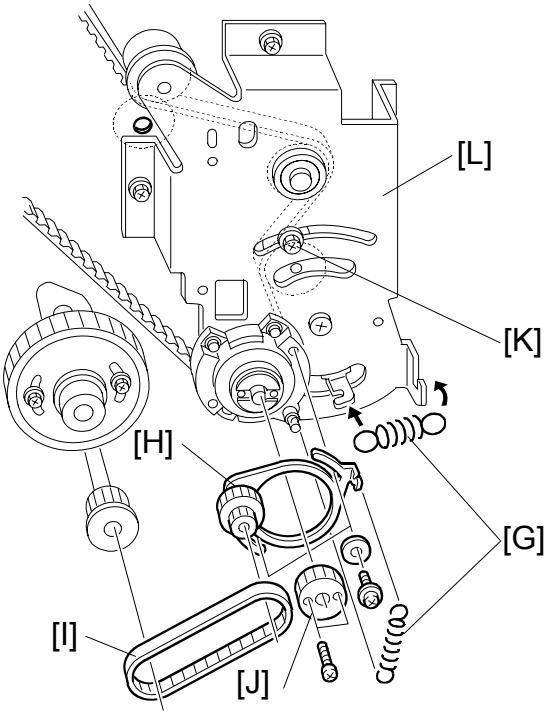

7. Remove the 2 springs [G].
8. Remove the pulley bracket [H] (🔩 x 2).
9. Remove the timing belt [I].
10. Remove the gear [J] (🔩 x 2).
11. Loosen the screw [K]
12. Remove the bracket [L] (🔩 x 5, Cord clamp x 2, Bearing x 2).

NOTE: 1) One of the screws is under the main wire harness. Take care not to damage the wire harness when you remove it
2) When re-installing the bracket [L], make sure to align the cutout in the bracket [M] with pawl on the torque limiter [N] as shown.

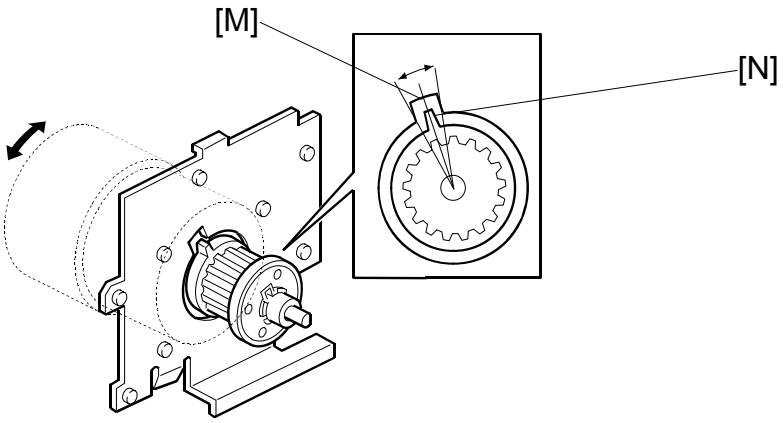

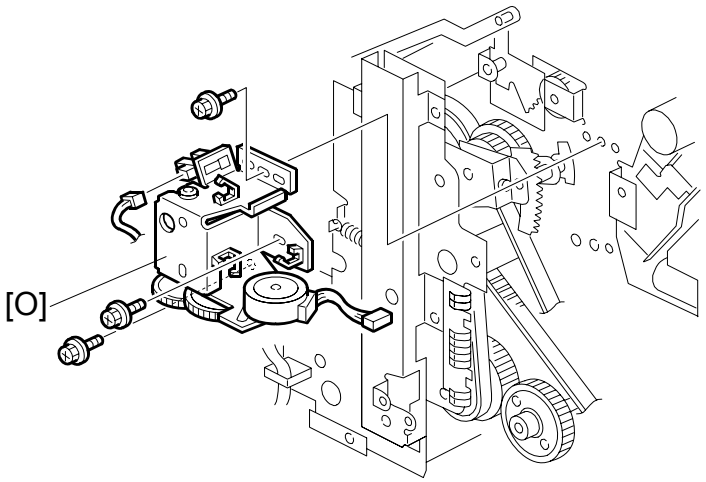

13. Remove the image shift unit [O] (x 3, x 2).

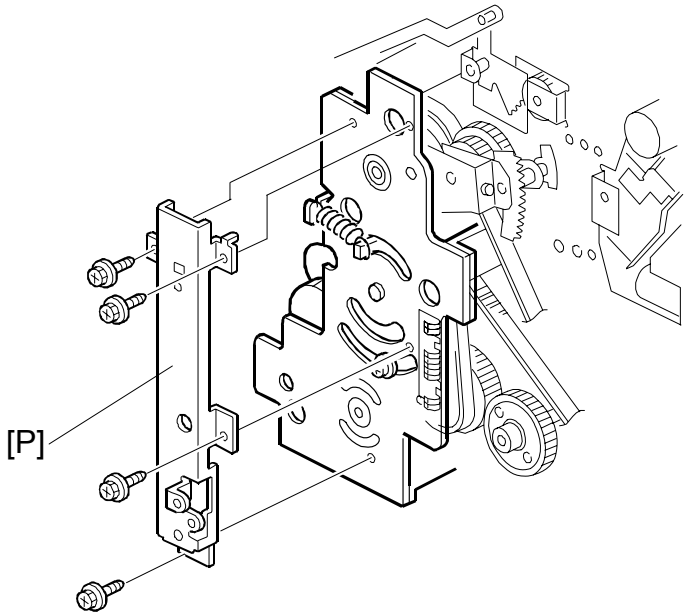

14. Remove the supporter for the ACU-ECU assembly and PSU [P] (x 4).

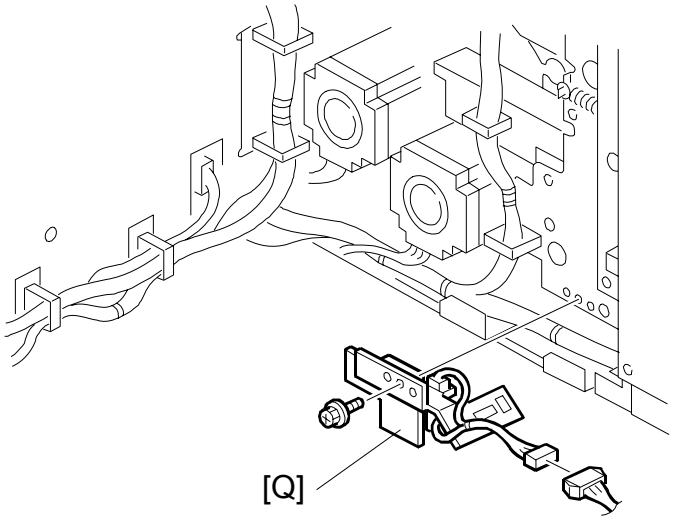

15. Printing pressure sensor bracket [Q] (x 1, x 1).

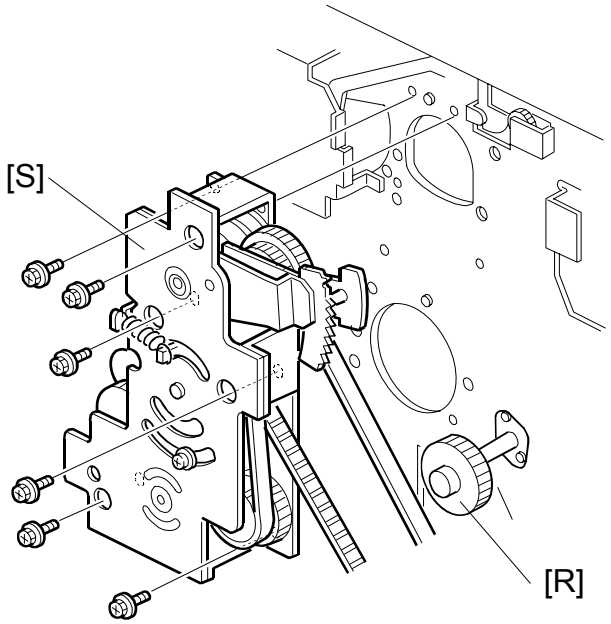

16. Remove the printing pressure cam drive gear [R] (x 2).
17. Remove the main drive unit [S] (x 6, Cord clamp x 1).

Reassembly Procedure

The following items must be checked or set while reinstalling the main drive section:

- Drum home position
- Image shifting arm home position
- Pressure cylinder drive reinstalling position
- Scissors gear reinstalling position
- Printing pressure cam drive gear reinstalling position
- Registration roller lifting cam reinstalling position
- Paper exit pawl drive cam reinstalling position
- Pressure cylinder rotation knob position

Setting the drum drive disk, image shifting arm, pressure cylinder drive disk, and scissors gear in their home positions

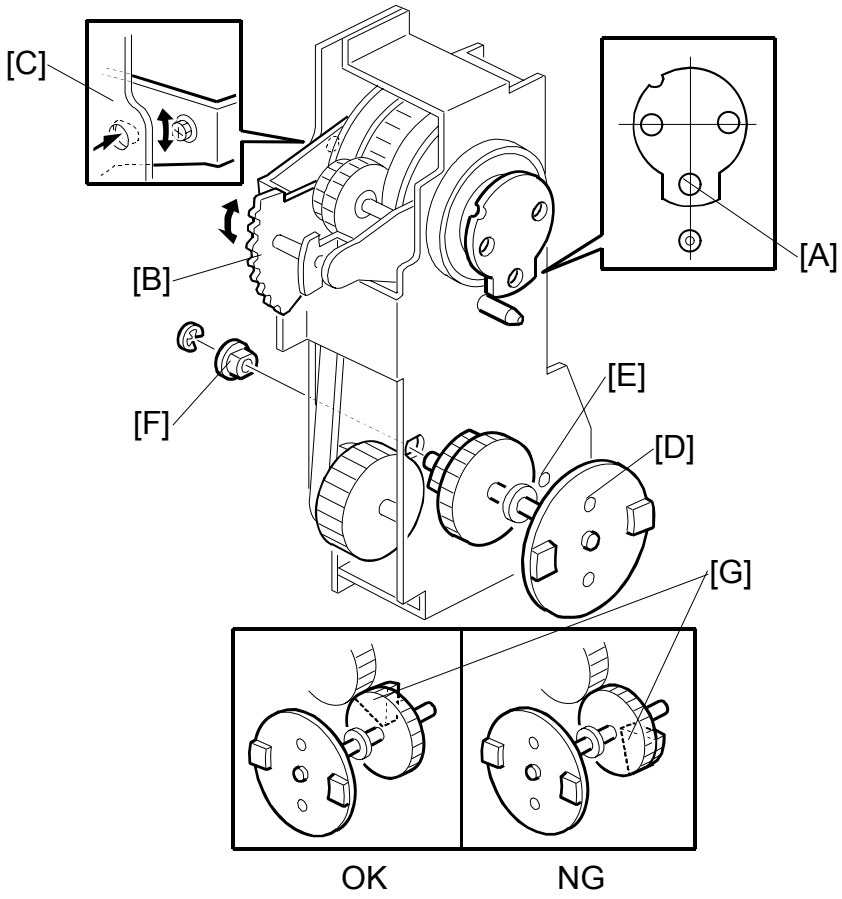

1. To set the drum drive disk in the home position, align the elongated hole [A] in the drum drive disk straight down by turning the disk.
2. Set the image shift arm [B] in the home position. To do this, align the hole in the upper plate [C] with the elongated hole in the image shift arm.
3. Align the hole in the pressure cylinder drive disk [D] with the hole in the side plate of the drive unit [E], then install the bushing [F] (one E-ring).
   NOTE: Before installing the bushing [F], make sure that the scissors gear [G] also meshes with the next gear. If the scissors gear is set incorrectly by 180 degrees, the scissors gear will not mesh with that gear. (See OK and NG in the diagram above.)

Install the main drive unit on the machine rear frame

-From the operation side-

4. Remove the front cover, the knob cover and the inner cover (☛ 3.2.1).

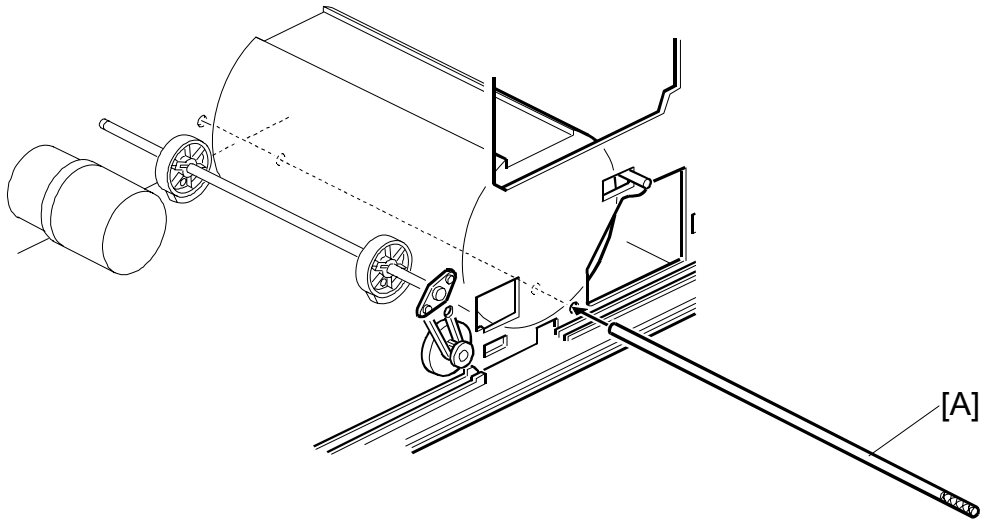

5. From the operation side of the machine, insert the positioning shaft [A] (special tools) to secure the pressure cylinder in the home position.
   - Pass one shaft through the pressure cylinder as shown.

- From the paper exit side -

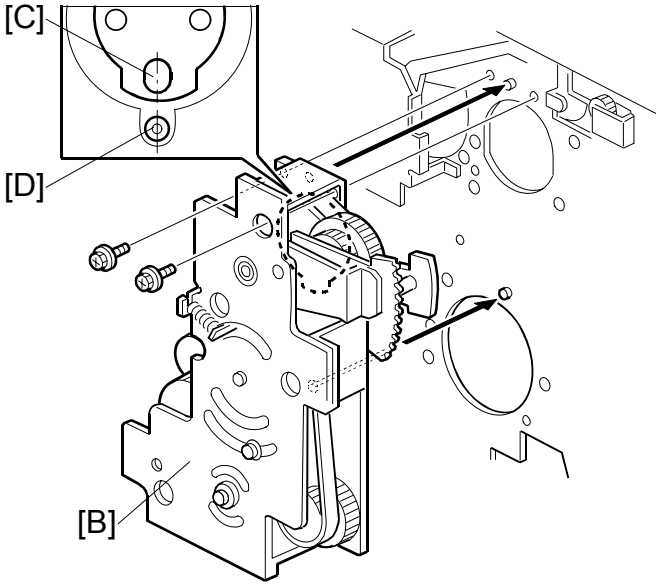

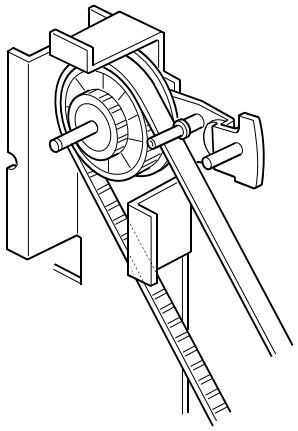

6. Secure the main drive unit [B] on the machine rear frame (🔩 x 2).
   NOTE: 1) Install the two screws temporarily, because you must tighten them in step 8.
   2) When installing the main drive unit, align the elongated hole in the drive disk [C] with shaft [D] above it, as shown.

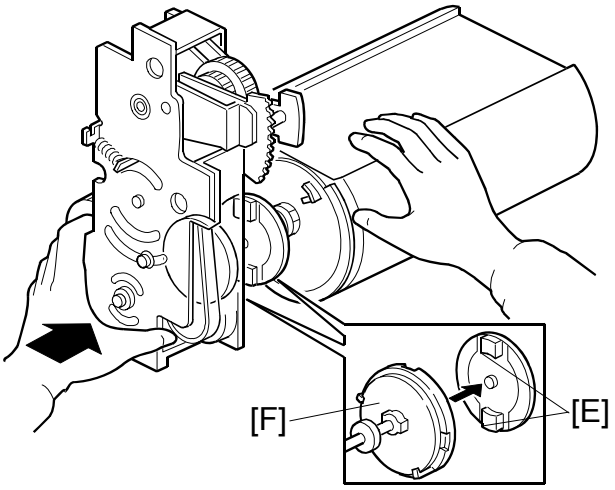

7. While aligning and holding the pressure cylinder horizontally as shown, set the main drive unit so that the convex points of the pressure cylinder's drive disk [E] meet the concave points of the pressure cylinder drive transmission disk [F] (made of white plastic).
   NOTE: Hold the drum drive disk, image shifting arm, pressure cylinder drive disk, and scissors gear in their home positions as explained in steps 1, 2 and 3.

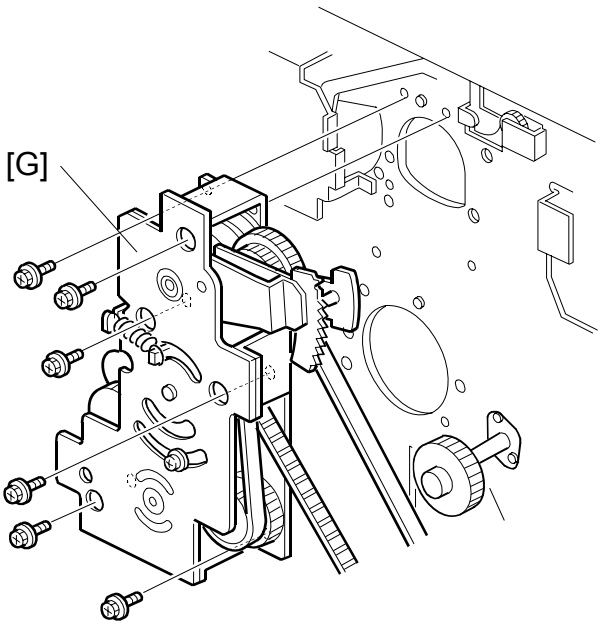

8. Secure the main drive unit [G] on the machine rear frame (☞ x 6).

MAIN DRIVE AND IMAGE UP/DOWN SHIFTING DRIVE SECTION

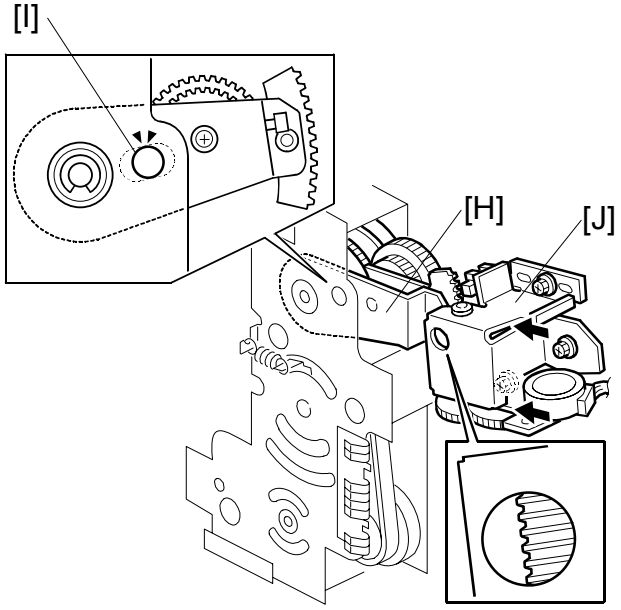

9. Make sure that the image shift arm [H] is in the home position. To do this, align the hole in the upper plate [I] with the elongated hole in the image shift arm (as explained in step 2).
10. Push the image up/down shift drive unit [J] against the image shift arm sector gear, and secure the unit (x 3, x 3).
    NOTE: 1) Ensure that the unit is set without any play.
    2) Do not push on the unit too strongly. Ensure that the image shift arm moves smoothly after securing the unit. If it does not, SC303 will be displayed at power up.
11. Install the main drive timing belt on the main motor shaft, and re-attach the parts in the main motor area. (Refer to steps 5 through 15 of the Disassembly procedure.)
12. Remove the positioning shaft (this was inserted in step 5 of the reassembly procedure).

Fine adjustment using the special tools

- Left cover (☛ 3.2.2)
- Paper delivery cover (☛ 3.12.2)
- Air knife fan unit (☛ 3.12.2)
- Paper exit pawl (☛ 3.12.1)

13. Install the drum unit in the machine.
14. Install the front cover.
15. Close the front cover, connect the power plug, then turn on the main switch. The up/down image shifting mechanism will initialize.
    NOTE: This procedure is needed to return the image shift arm to its home position. If the image shift arm is not returned to home position exactly in this step, correct positioning for each main drive part will not be obtained.
16. Turn off the main switch, and disconnect the power plug.

- Knob (☛ 3.2.1)
- Paper delivery unit (☛ 3.12.2)
- Printing pressure shift cam unit (☛ 3.12.3)

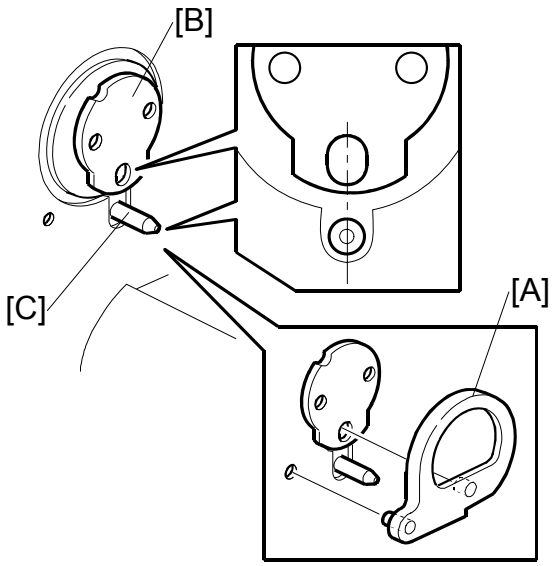

17. Make sure that the drum drive disk is in the home position, by installing the drum drive securing tool [A].
    NOTE: 1) The tools are available as a service part. The part number is #C2299000 (three parts as set).
    2) If the special tool is not available, align the elongated hole in the drum drive disk [B] with the shaft [C] below it, as shown.

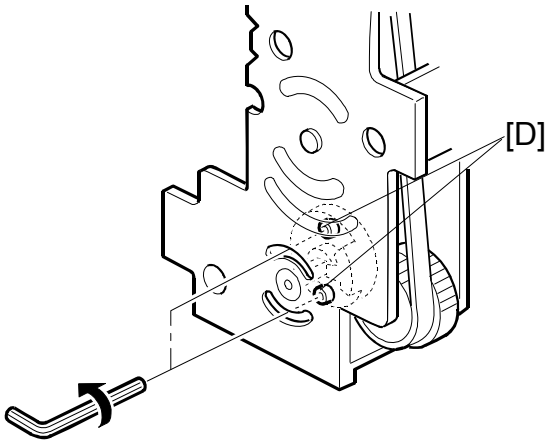

18. From the rear, loosen the two screws [D] to allow the pressure cylinder drive gear to turn freely.
    NOTE: Do not remove the screws.

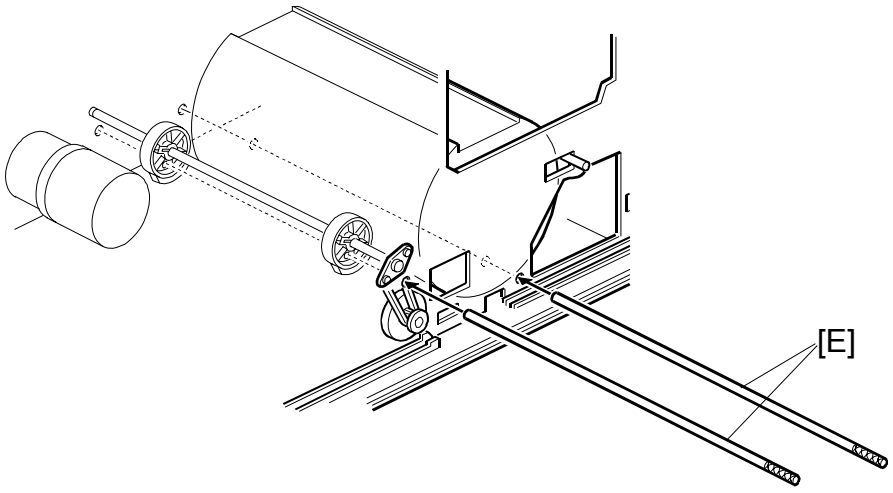

19. From the operation side of the machine, insert the two positioning shafts [E] (special tools) to secure the pressure cylinder and printing pressure cams in their home positions.
    - Pass one shaft through the pressure cylinder as shown.
    - Pass the other shaft through the two printing pressure cams as shown.

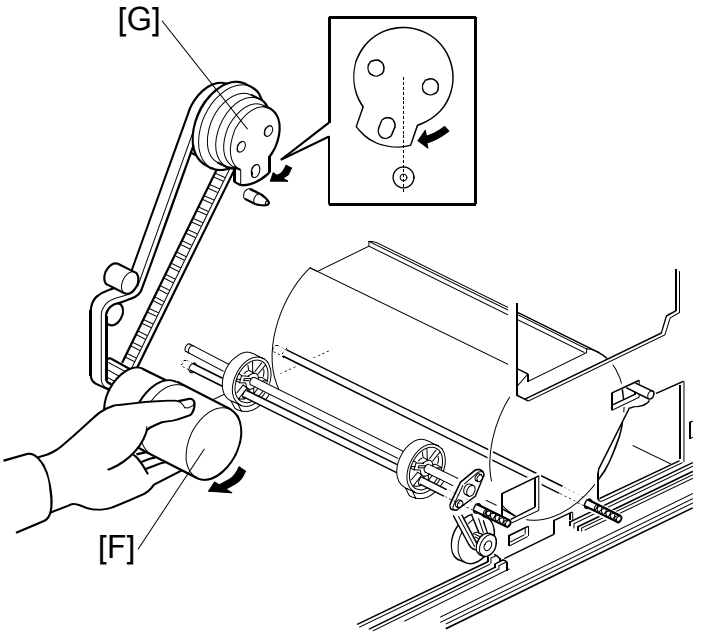

20. Remove only the drum dive-securing tool (leave the two positioning shafts). Then turn the main motor [F] clockwise by hand until the drum drive disk [G] has turned about 10 degrees, as shown.
    NOTE: Although the motor will not turn smoothly since the drive is secured with the special tools, this is normal.

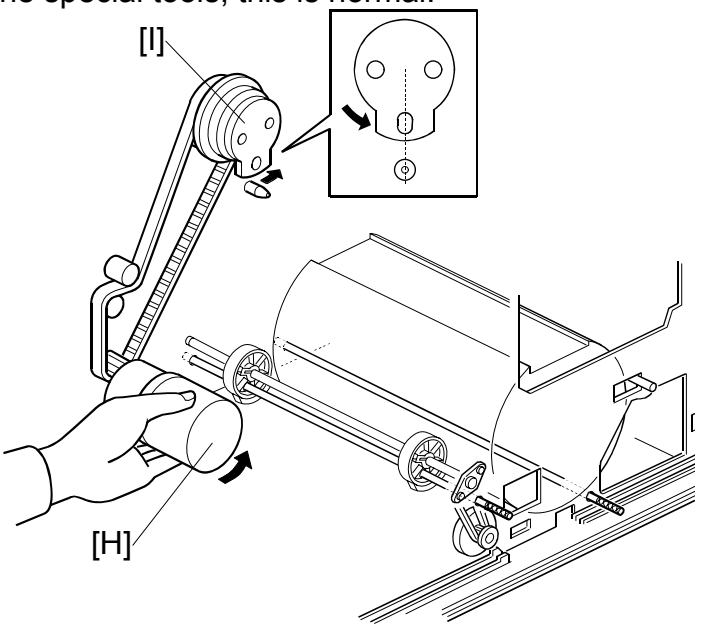

21. Turn the main motor [H] counterclockwise, and set the drum drive disk [I] in the home position. (If the disk is turned too much at this point, reset from step 19.)

CAUTION: These steps are needed to put gear play in the direction opposite to the printing direction. Make sure to turn the main motor by hand in the above order (steps 20 and 21). If the motor is turned in wrong order,

the main drive will turn slightly when the two shafts (special tools) are removed. If you turned it in the wrong order, return to step 20 then do step 21.

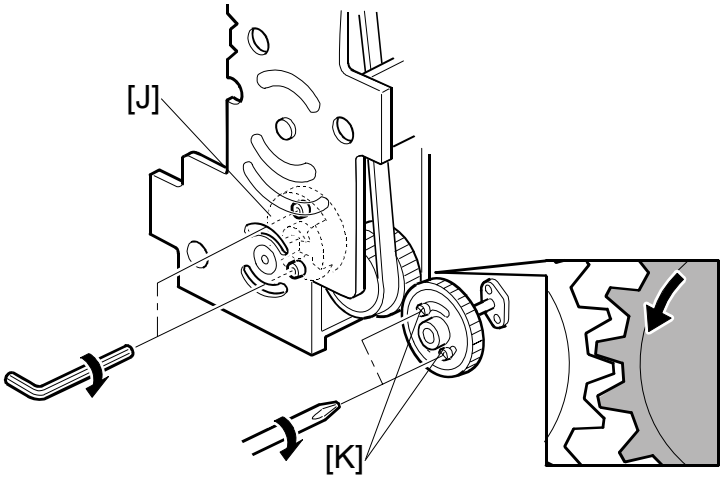

22. Set the drum drive-securing tool once again. (See step 17.)

CAUTION: Do not turn the drum drive disk by force while setting the tool. If you turned the disk, return to step 20 then do step 21.

23. Secure the pressure cylinder drive gear [J] (🔩 x 2).

24. Install the printing pressure cam drive gear and firmly tighten the 2 screws [K].

NOTE: 1) To remove gear play, secure the cam drive gear while turning it counterclockwise (as viewed from the rear).
2) Secure the cam drive gear by tightening the two screws in the middle of the curved oval holes. This allows for the maximum adjustable range for later repositioning of the gear.

Finishing

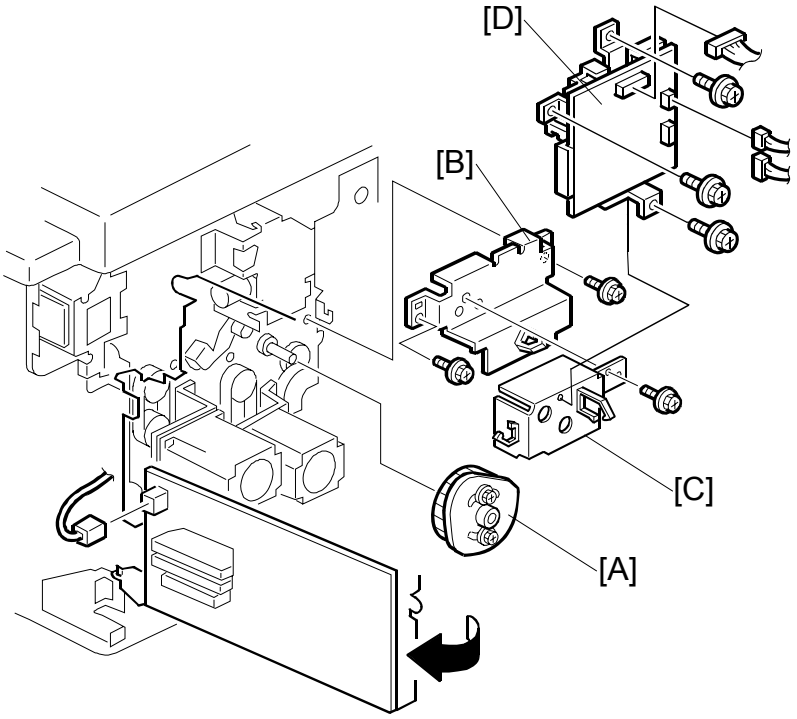

1. Install the registration roller lifting cam [A]. (☛ 3.9.13 Registration roller lifting cam Position Adjustment for the correct position of the cam.)
2. Install the lifting cam bracket [B], the motor cover [C], and the double feed detector board [D]
3. Install the exit pawl, and adjust the paper exit pawl drive timing. (☛ 3.12.6 Paper exit pawl drive timing adjustment.)
4. Adjust the pressure cylinder rotation knob. (☛ 3.11.4 Pressure cylinder rotation knob adjustment.)
5. Remove all special tools (the drum drive-securing tool and two positioning shafts).
6. Adjust the gap between the exit pawl and the drum. Also adjust the gap between the paper scraper and the pressure cylinder. (☛ 3.12.5 Gap adjustment between paper pick-off plate and pressure cylinder and ☛ 3.12.7 Gap adjustment between exit pawl and drum.)
7. Install the printing pressure shift cam unit. (☛ 3.12.3)
8. Install the air knife fan unit. (☛ 3.12.2)
9. Install the paper delivery unit. (☛ 3.12.2)
10. Install the paper delivery cover. (☛ 3.12.2)
11. Install the knob. (☛ 3.2.1)
12. Install the left cover. (☛ 3.2.2)
13. Install the front cover, inner cover and knob cover (☛ 3.2.1)

Copy Image Check Procedure after Main Drive and Image Up/Down Shifting Drive Section Re-assembly

When the main drive mechanism is disassembled and assembled, the image position on copies may fluctuate due to play in the drive components.

Whenever you disassemble the main drive mechanism, you must check the following items for the copy quality:

When the image position on copies is not constant

- Check the pressure cylinder position.
  Use the positioning shaft (a special tool) to check if the position of the pressure cylinder is correct. See steps 19 through 23 in "Reassembly Procedure" of 3.11.2 Main Drive Mechanism (Main Drive Timing Belt).

When the leading edge margin of copies (6 mm) is not constant

- Check the position of the printing pressure cams.
  Use the positioning shaft (a special tool) to check if the cam position is correct. See steps 19 through 24 in "Reassembly Procedure" of 3.11.2 Main Drive Mechanism (Main Drive Timing Belt).
- Check if you followed steps 13 through 16 in "Reassembly Procedure" of 3.11.2 Main Drive Mechanism (Main Drive Timing Belt).

Other procedures if copy image problems are still detected

- Check the image up/down shift drive unit position.
  See 3.11.7 Image Up/Down Shift Drive Unit Position Adjustment. Also, see 3.11.6 Image Up/Down Shift Worm-gear Position Adjustment.

- Check the image shift gear play.
  See 3.11.8 Image Shift Gear Pressure Adjustment.

- Check the scissors gear position.
  See step 3 in "Reassembly Procedure" of 3.11.2 Main Drive Mechanism (Main Drive Timing Belt). Also, see 3.11.5 Scissors Gear Position Adjustment.

3.11.3 SCISSORS GEAR

1. Turn off the main switch and disconnect the power plug. Then remove these parts.
   - Drum unit (☛ 3.8.1)
   - Front cover, knob cover, inner cover (☛ 3.2.1)
   - Rear cover (☛ 3.2.2)
   - Paper delivery unit (☛ 3.12.2)
   - Printing pressure cam shift unit (☛ 3.12.3)

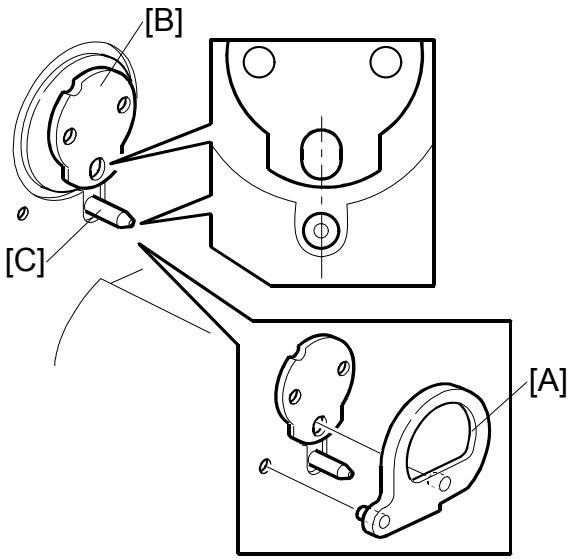

2. Make sure that the drum drive disk is in the home position, by installing the drum drive securing tool [A].
   NOTE: 1) The tools are available as a service part. The part number is #C2299000 (three parts as set).
   2) If the special tool is not available, align the elongated hole in the drum drive disk [B] with the shaft [C] below it, as shown.

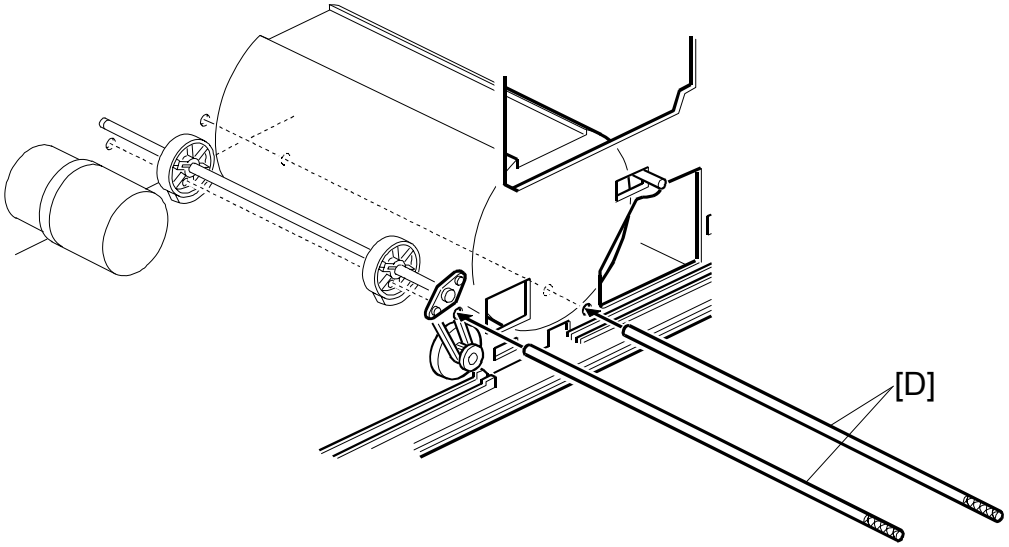

3. From the operation side of the machine, insert the positioning shafts [D] (special tools) to secure the pressure cylinder and printing pressure cams in the their home positions.
   - Pass one shaft through the pressure cylinder as shown.
   - Pass the other shaft through the two printing pressure cams as shown.
4. Swing out the ACU-ECU assembly and PSU (☛ 3.5.1).

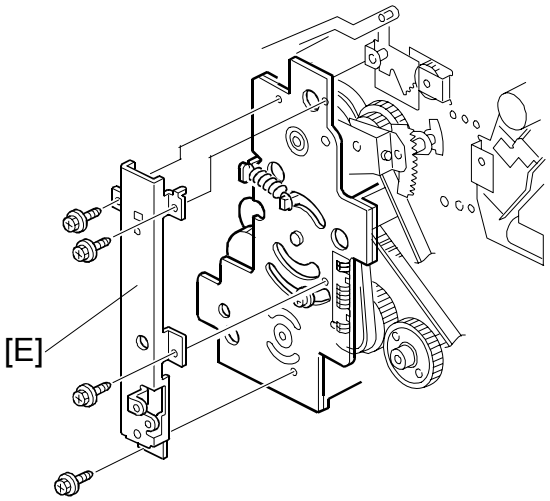

5. Remove the supporter for the ACU-ECU assembly and PSU [E] (🔩 x 4).

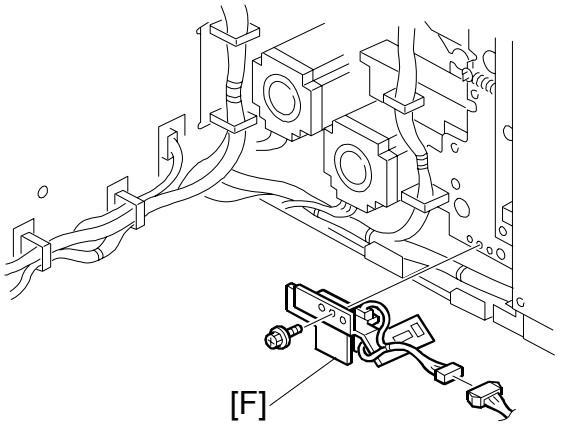

6. Remove the printing pressure sensor bracket [F] (x 1, x 1).

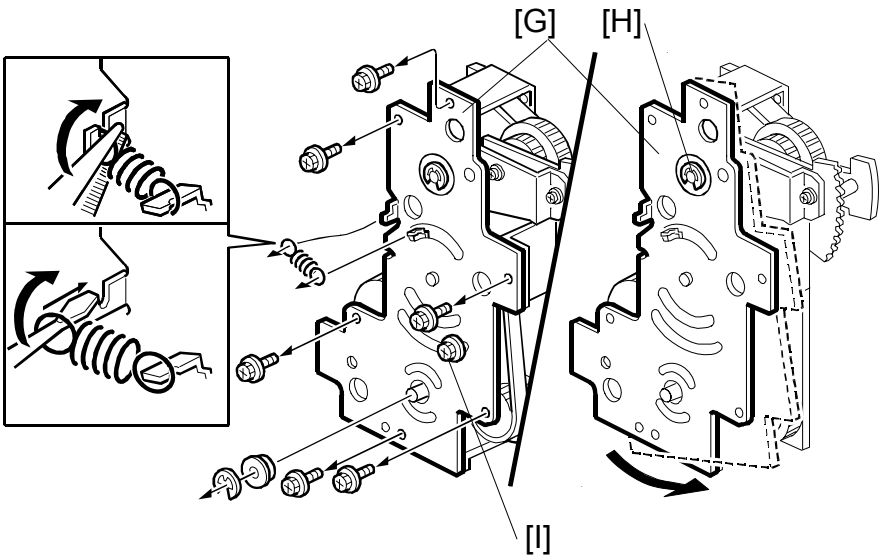

7. Remove the upper cover [G] (x 7, x 1, Bearing x 1, Spring x 1).
   NOTE: Do not remove the bearing and E-ring [H].
8. Loosen the screw [I].
9. Turn the upper cover [G] counterclockwise.

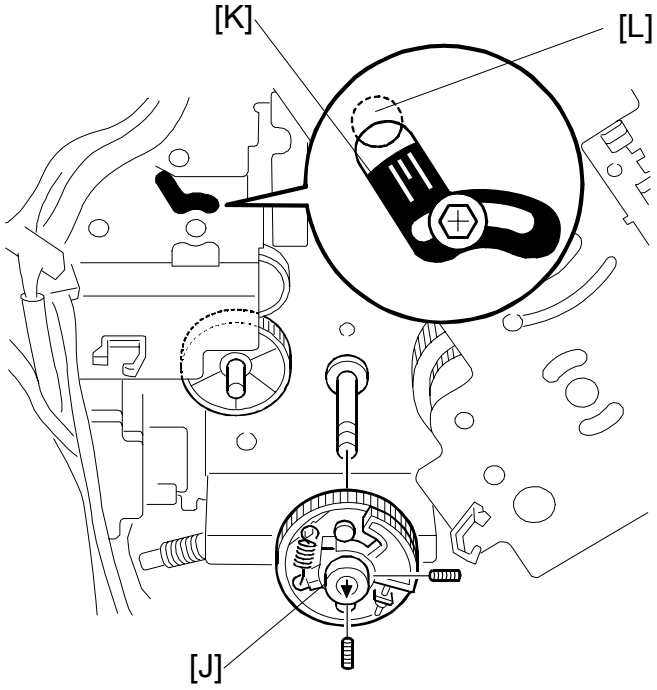

10. Remove the scissors gear [J] (Hexagon bolt x 2).
    NOTE: When replacing the scissors gear, check the registration roller lifting cam position [K], as shown. (The short central line must be aligned with the center of the circular hole [L].)

3.11.4 PRESSURE CYLINDER ROTATION KNOB ADJUSTMENT

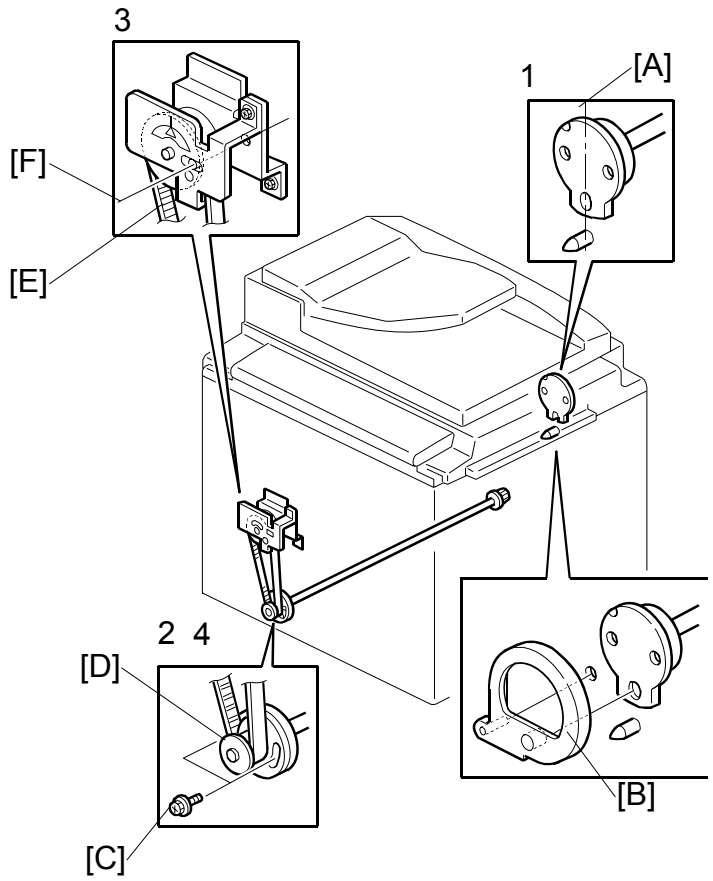

1. Set the drum drive securing tool [B] (a special tool) as shown to hold the drum drive at home position.
   NOTE: If the special tool is not available, align the long hole of the drum drive disk [A] exactly with the shaft below it.
2. Loosen two screws [C] so that the pulley [D] freely turns.
3. Turn the timing belt [E] by hand until the triangle mark on the indicator disk meets the center division. (When the indicator disk is in the correct position, the hole in the disk and the two holes in the bracket are in line, as shown [F].
4. Retighten the two screws [C] to secure the pulley in position.

3.11.5 SCISSORS GEAR POSITION ADJUSTMENT

Purpose: If the position of the scissors gear is not correct, the paper feed registration will vary.

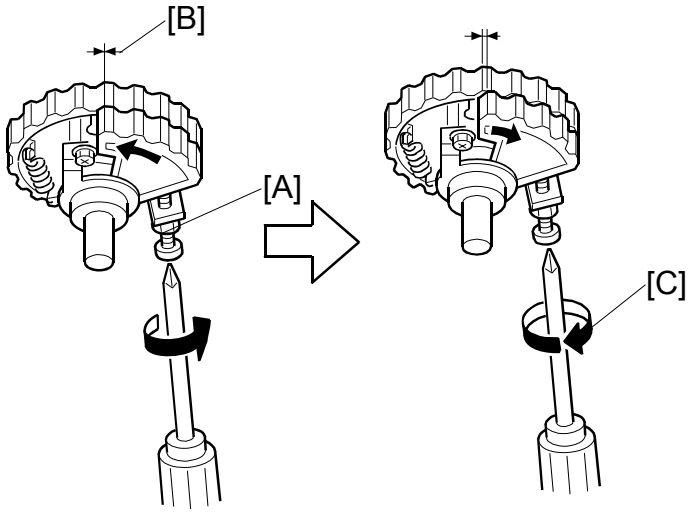

1. Loosen the lock nut [A].
2. Tighten the screw, so that the gear meshes on both gears are aligned as shown [B].
3. Turn the screw fully counterclockwise circle to loosen it, as shown [C].
4. Holding the screw, tighten the lock nut [A].

3.11.6 IMAGE UP/DOWN SHIFT WORM-GEAR POSITION ADJUSTMENT

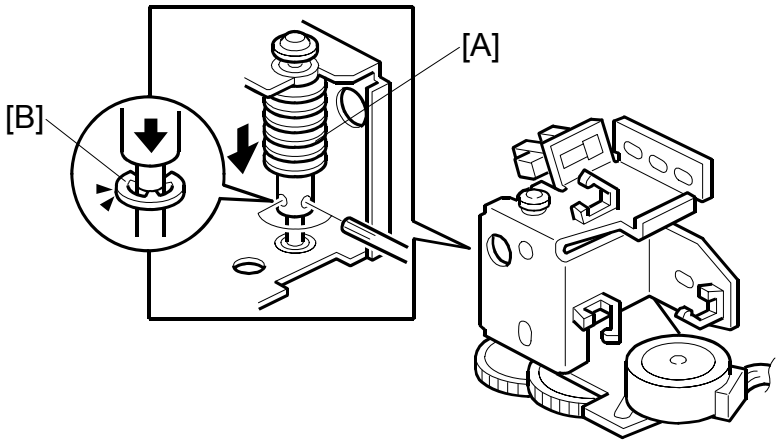

Fully push down the worm gear [A], and push down E-ring [B] of the worm gear shaft. While holding them together, secure with the 2 hexagon screws.

3.11.7 IMAGE UP/DOWN SHIFT DRIVE UNIT POSITION ADJUSTMENT

Purpose: To take out any play while using the image up/down shifting function.

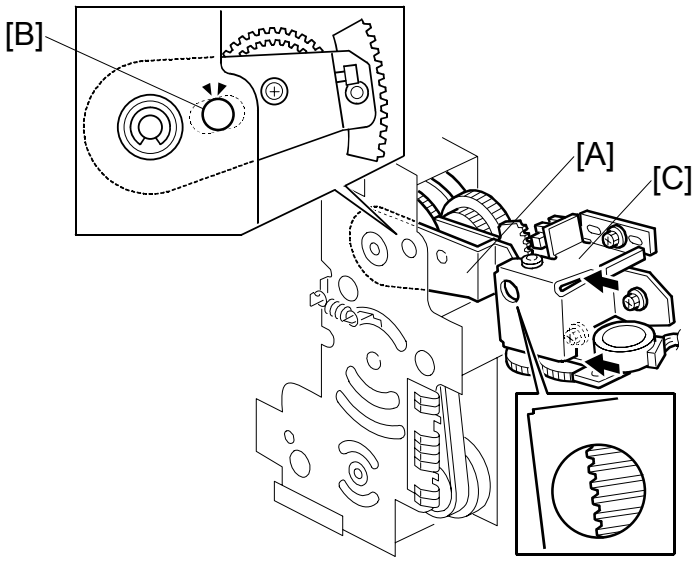

1. Set the image shift arm [A] in the home position. Align the hole in the upper plate with the elongated hole in the image shift arm [B].
2. Push the image up/down shift drive unit [C] against the image shift arm sector gear, and secure the unit (x 3, x 3).

NOTE: 1) Set the arm without play in the vertical direction of the image shift arm.
2) Do not push too strongly. Check if the image shift arm moves smoothly after securing the unit. If it does not, SC303 will light at power on.

3.11.8 IMAGE SHIFT GEAR PRESSURE ADJUSTMENT

Purpose: To remove play while using the image gear, and to make sure that the image shift gear moves smoothly along the drum drive gear.

1. Turn off the main switch and disconnect the power plug. Then remove these parts.
   - Drum unit (☛ 3.8.1)
   - Rear cover (☛ 3.2.2)
2. Swing out the ACU-ECU assembly and PSU (☛ 3.5.1).

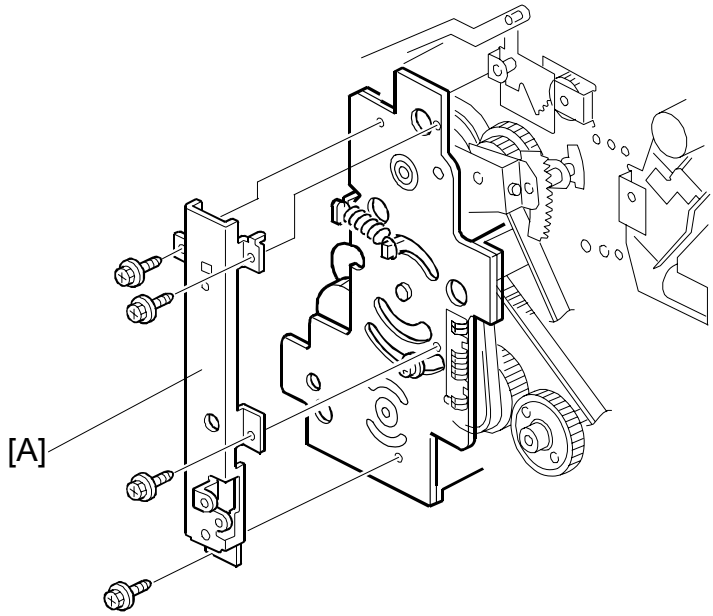

3. Remove the supporter for the ACU-ECU assembly and PSU [A] (🔩 x 4).

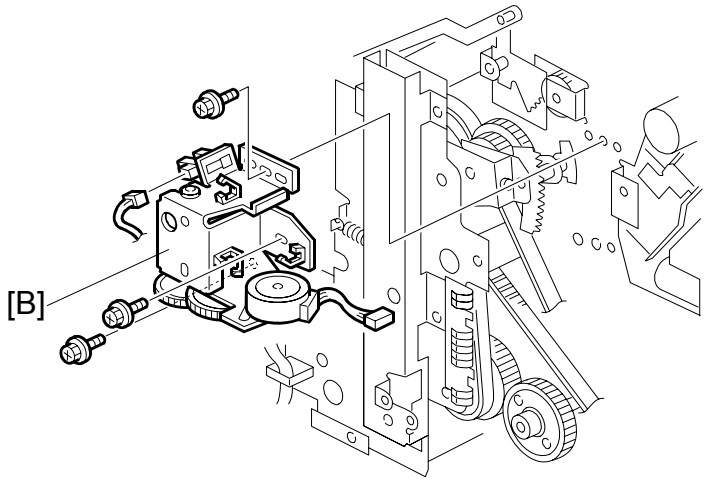

4. Remove the image shifting unit [B] (🔩 x 3, 🖐 x 2).

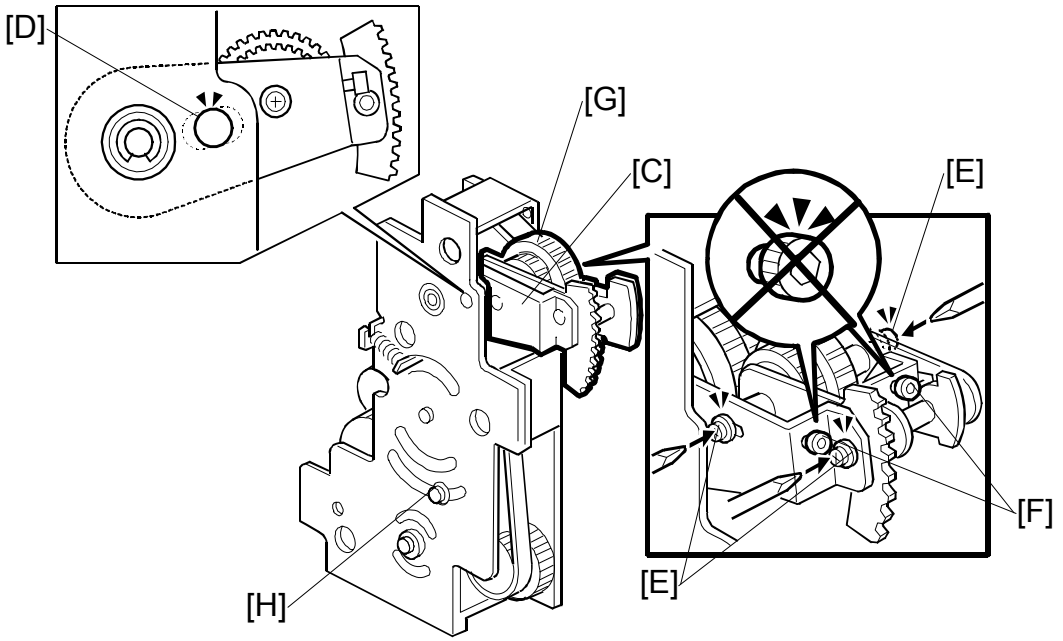

5. Set the image shift arm [C] in the home position. To do this, align the hole in the upper plate [D] with the elongated hole in the image shift arm.
6. Loosen the three screws [E]. The play between the image shift gear and the drum drive gear is automatically removed.
   NOTE: Do not touch the two hexagon bolts [F]. If you do, it can damage the image shift gear [G].
7. Move the image shift arm [C] up and down and set it in the home position again.
8. Secure the three screws [E].
9. Install the image shifting unit [B] (x 3, x 2).
10. Loosen the screw [H] and secure it again.

3.12 PAPER DELIVERY SECTION

3.12.1 PAPER EXIT PAWL

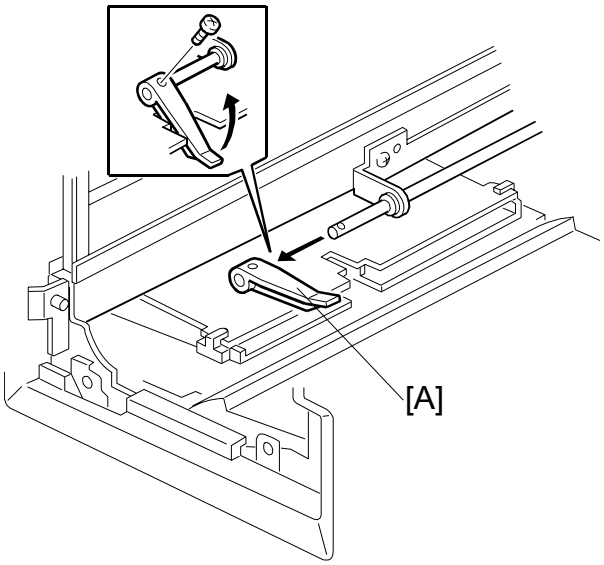

- Drum unit (☛ 3.8.1)

[A]: Paper exit pawl (🖉 x 1)

3.12.2 PAPER DELIVERY UNIT, AIR KNIFE FAN UNIT, PAPER PICK-OFF PLATE

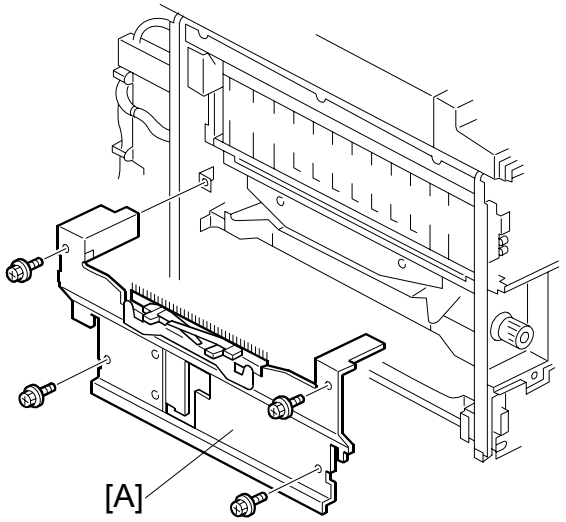

- Left cover (☛ 3.2.2)
- Knob cover (☛ 3.2.1)

[A]: Paper delivery cover (🔩 x 4)

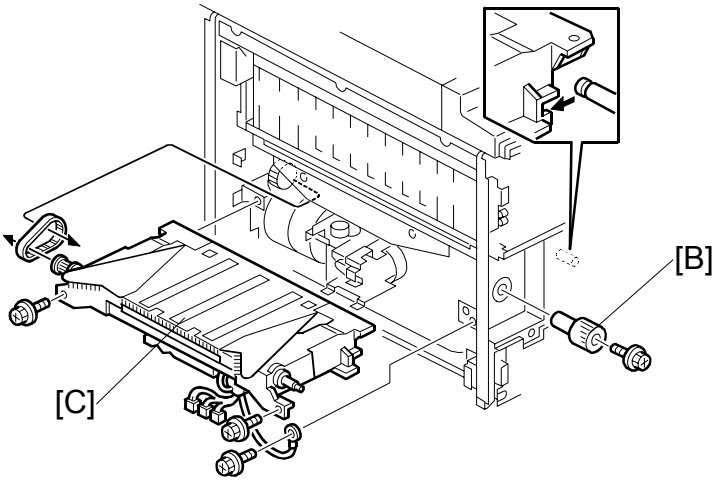

[B]: Knob (🔩 x 1)
[C]: Paper delivery unit (🔩 x 3, 🔌 x 3)

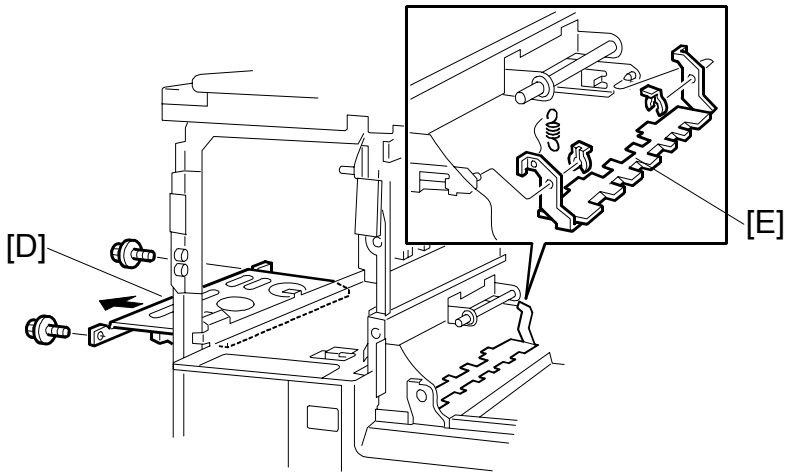

[D]: Air knife fan unit (x 2, x 1)
[E]: Paper pick-off plate (x 2, Spring x 1)

3.12.3 JOB SEPARATOR UNIT, PRINTING PRESSURE CAM SHIFT UNIT

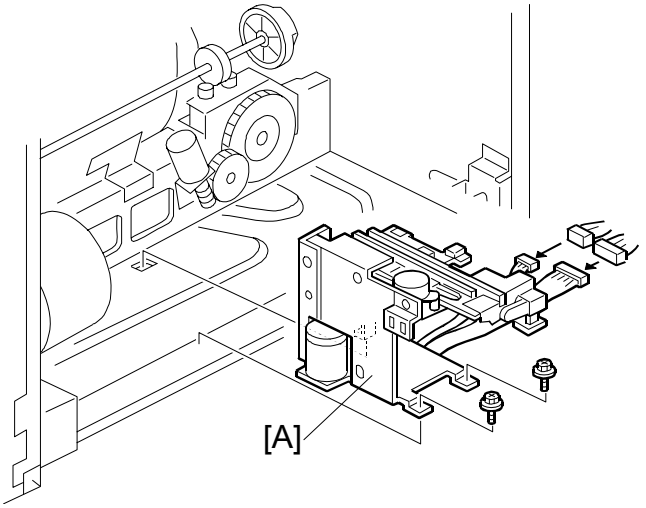

- Paper delivery unit (☛ 3.12.2)

[A]: Job separator unit (🔩 x 2, 🖐 x 2)

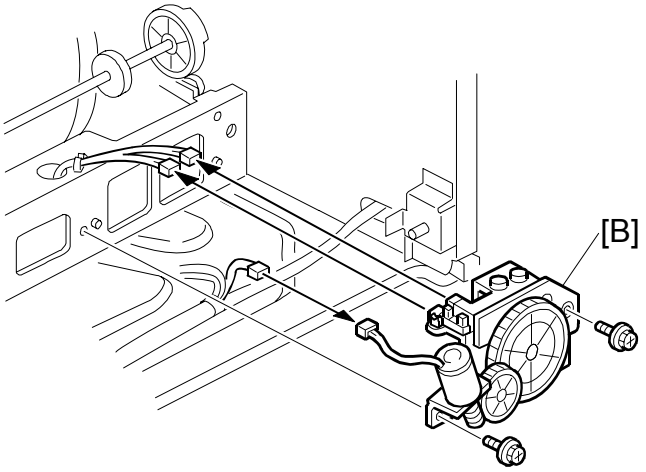

[B]: Printing pressure cam shift unit (🔩 x 2, 🖐 x 3)

3.12.4 PAPER EXIT SENSOR, TRANSPORT VACUUM FAN, PAPER EXIT SENSOR

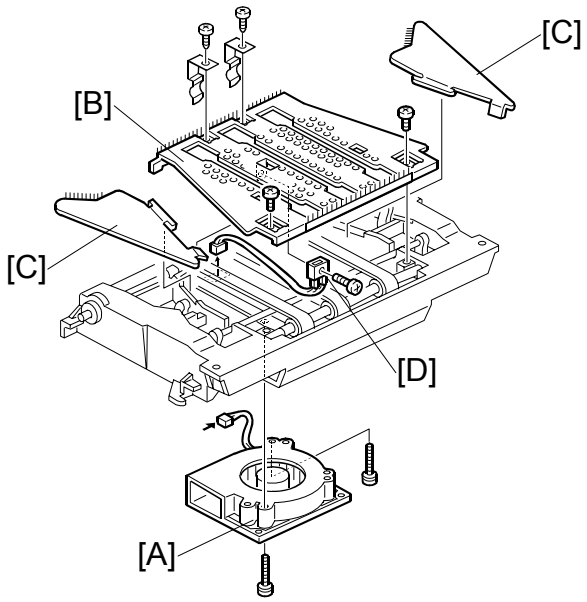

- Paper delivery unit (☛ 3.12.2)

[A]: Transport vacuum fan (🔩 x 2, 🖐 x 1)
[B]: Upper cover (🔩 x 4, 🖐 x 1)
[C]: Paper guide wings
[D]: Paper exit sensor (🔩 x 1)

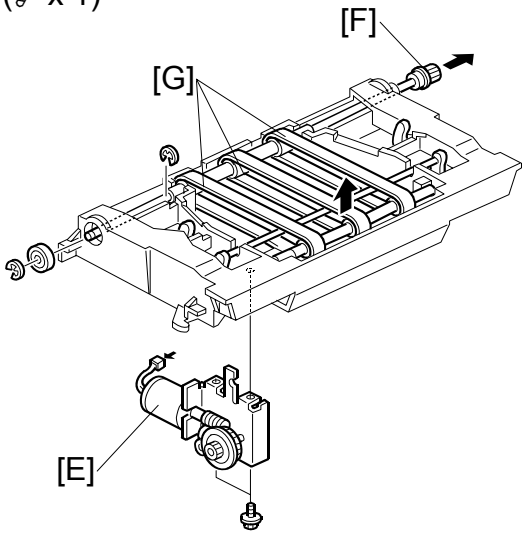

[E]: Wing guide motor unit (🔩 x 2, 🖐 x 1)
[F]: Drive roller shaft (ℂ x 2)
[G]: Transport belts

3.12.5 GAP ADJUSTMENT BETWEEN PAPER PICK-OFF PLATE AND PRESSURE CYLINDER

Purpose: To ensure smooth paper feed to the paper delivery unit.

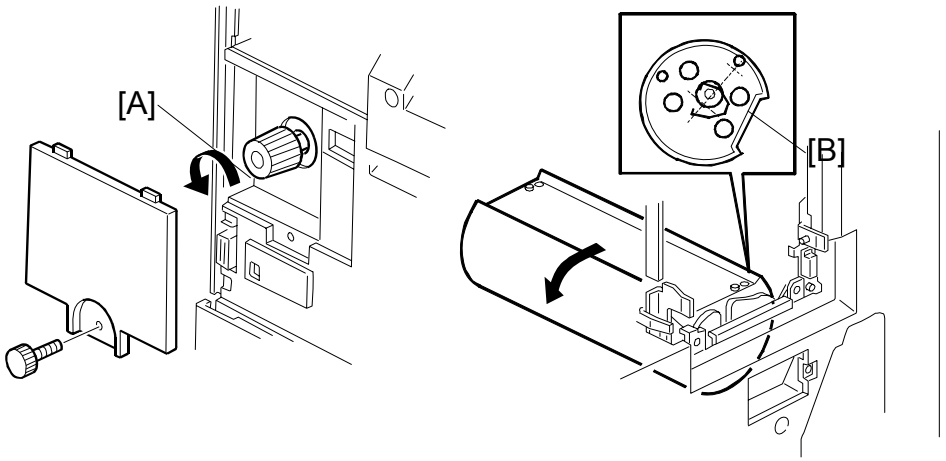

- Drum unit (☛ 3.8.1)
- Master eject box (☛ 3.6.1)
- Left cover (☛ 3.2.2)
- Knob cover (☛ 3.2.1)

1. Apply the printing pressure as follows, to push the pressure cylinder up to the printing position.
   1) Access SP5-64-2, and select “Start” for the printing pressure release solenoid.
   2) Turn the knob [A] until the flat part of the cylinder [B] is turned by approximately 120º (the starting position is with the flat part at the top).
   3) Leave SP mode.

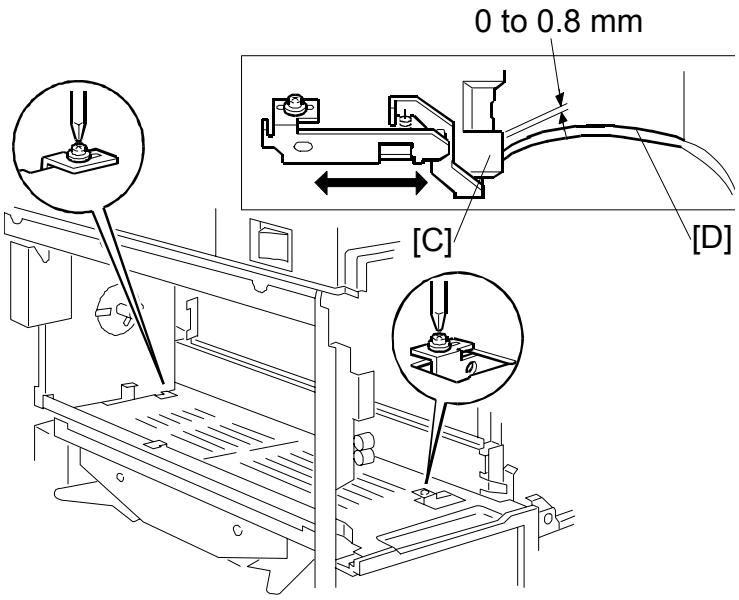

2. Adjust the clearance between the paper pick-off plate [C] and the surface of the pressure cylinder [D] until it is 0 to 0.8 mm (loosen the 2 screws).

CAUTION: Be sure to do this adjustment after pushing the pressure cylinder up to the printing section. If the gap is adjusted with the pressure cylinder in the non-printing section, the paper pick-off plate will damage the pressure cylinder when the machine pushes the pressure cylinder up to apply the printing pressure, because the gap will be too small.

3.12.6 PAPER EXIT PAWL DRIVE TIMING ADJUSTMENT

Purpose: To ensure smooth feed, and to ensure that the exit pawl does not touch the master clamper on the drum.
NOTE: You must adjust this after the main drive belt or the main motor is replaced.

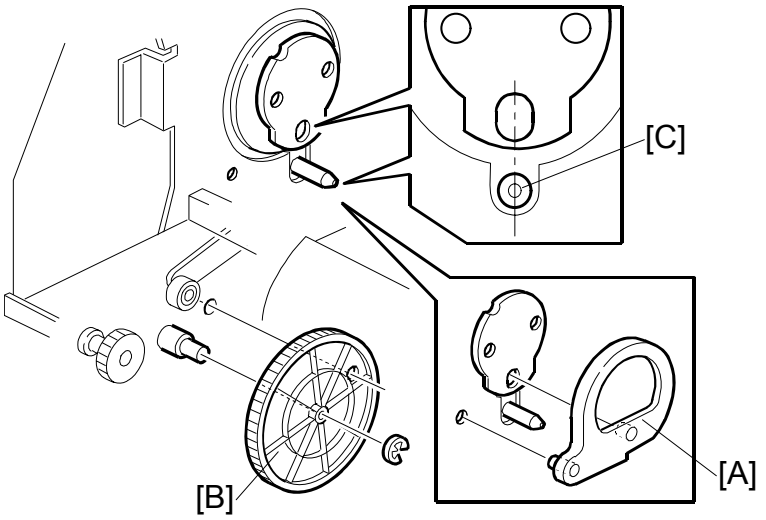

- Drum unit (☛ 3.8.1)
- Paper delivery unit (☛ 3.12.2)

1. Make sure that the drum drive disk is in the home position.
   NOTE: Normally, the disk is in the home position after the drum is removed. If necessary, set the drum securing tool [A] to make sure that the drum drive disk is in the home position. (If the special tool is not available, align the long positioning hole in the drum drive disk exactly with the shaft [C] below it as shown.)
2. Make sure that the positioning holes in the rear frame and the drive gear [B] are in line as shown [C].
3. If the holes are in line, the paper exit pawl drive timing is OK. If they are not, remove the gear [B] and reinstall it so that the holes are in line.

3.12.7 GAP ADJUSTMENT BETWEEN EXIT PAWL AND DRUM

Purpose: To ensure that the paper is delivered without paper wrap or damage.

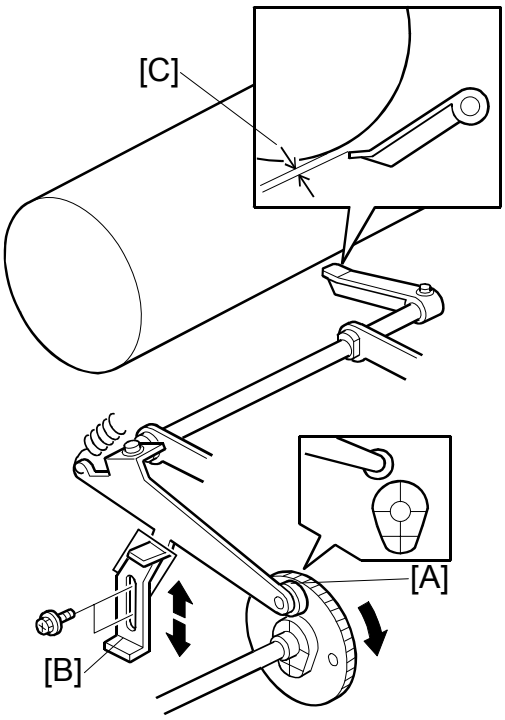

1. Turn the main drive manually, so that the bearing [A] of the exit pawl arm rides on the low point of the cam.
   NOTE: Use the main drive rotation knob to turn the main drive.
2. By moving the adjusting plate [B], adjust the clearance [C] between the drum and the top of the exit pawl until it is 1 ± 0.5 mm.

3.12.8 CHOCKS

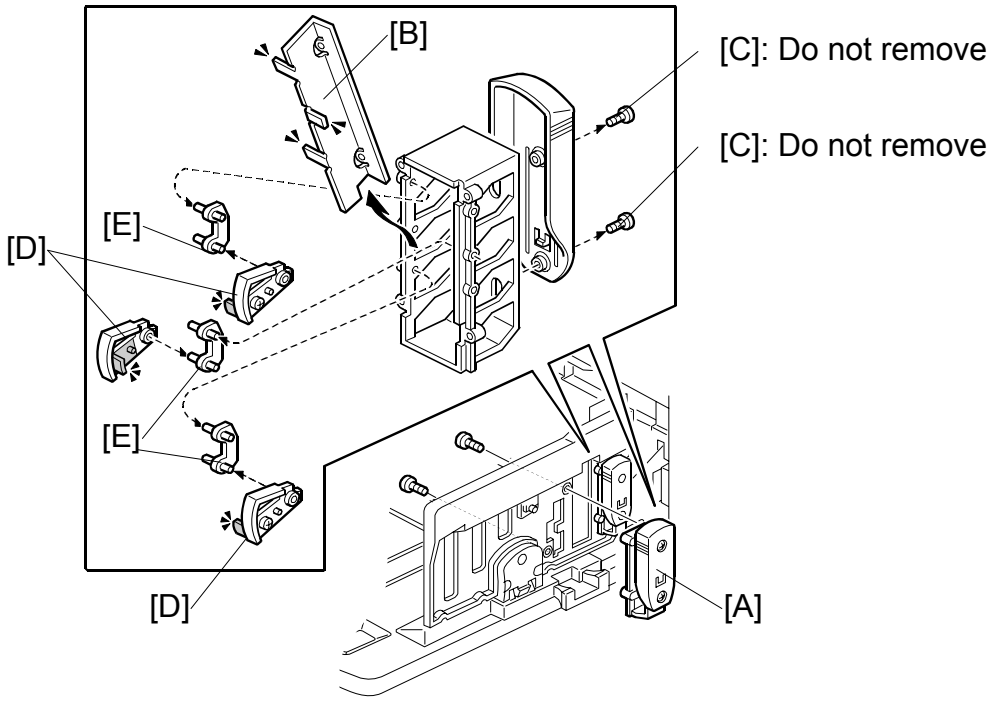

Operation side

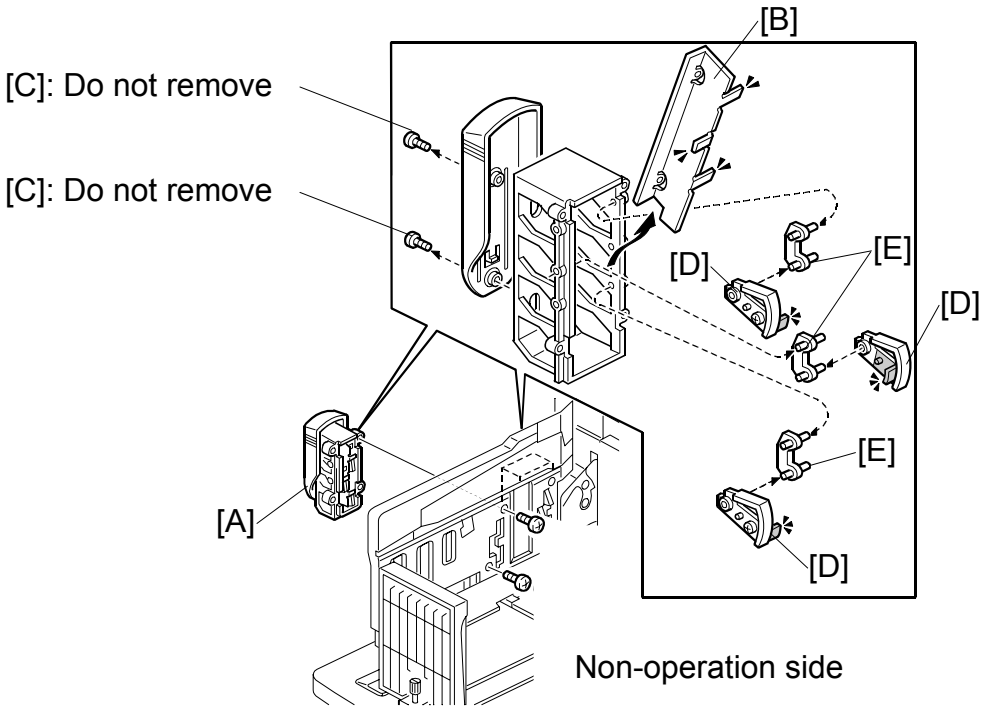

Non-operation side

[A]: Chocks (🔩 x 2)
[B]: Buffer fin bracket (🔩 x 2 [C]) – Normally, do not disassemble parts [B] to [E] in the field.
[D]: Buffer fin
[E]: Buffer fin link

TROUBLESHOOTING

4. TROUBLESHOOTING

4.1 SERVICE CALL CODES

⚠WARNING

Never turn off the main power when the power LED is lit or flashing. To avoid damaging the hard disk or memory, press the operation power switch to switch the power off, wait for the power LED to go off, and then switch the main power switch off.

NOTE: 1) If the problem concerns electrical circuit boards, first disconnect then reconnect the connectors before replacing the PCBs.
2) If the problem concerns a motor lock, first check the mechanical load before replacing motors or sensors.

4.2 CLASSIFICATION LIST

Number	Unit
100	Scanner
200	Mater Making Unit
300	Drum
400	Master Exit
500	Paper delivery and Exit
600	Electrical component
700	Options
800	ACU
900	ACU

4.3 SERVICE CALL CODE TABLE

Code	Title	Conditions	Possible Causes
Scanner			
SC100	Scanner motor lock	• Scanner HP sensor does not turn on after the scanner turns in the opposite of the scanning direction for more than 10 seconds. • Scanner HP sensor does not turn off after the scanner moves from the home position towards the scanning direction for more than 2 seconds.	• Defective scanner HP sensor • Scanner wire slip-off • Defective scanner motor
Master Making Unit			
SC200	Thermal head ID error	The CPU detects an abnormal ID signal from the thermal head.	• Defective thermal head • Defective ECU • Bad connection at thermal head, for example a fragment of the master roll is present.
SC201	Thermal head energy pulse error	The CPU detects an abnormal thermal head energy control pulse.	• Defective ECU
SC202	Thermal head thermistor short	The signal from the thermal head thermistor reaches more than 4.27 volts.	• Thermistor open circuit • Related connector disconnected
SC203	Thermal head temperature abnormal	When the Start key is pressed, a temperature of 54 °C or more is detected at the thermal head.	• Thermistor short • Defective thermal head
SC210	Cutter unit error	• The cutter HP sensor does not turn off after turning on the cutter for more than 3 seconds. • The cutter HP sensor does not turn on after turning on the cutter for more than 2.9 seconds, and the cutter HP sensor does not turn on after turning on the cutter motor in the opposite direction for more than 5 seconds.	• Defective sensor • Defective motor • Jammed master
SC211	Platen release motor lock	The sensor does not turn off for more than 5 seconds after the platen release motor on signal is generated. The sensor does not turn on for more than 5 seconds after the platen release motor on signal is generated.	• Defective sensor • Defective motor

Code	Title	Conditions	Possible Causes
SC212	Master cut error	The master edge sensor remains on after the first master cut recovery operation. (Normally, the master is cut if the master edge sensor detects a mis-cut master the first time.)	• Defective master edge sensor • Defective cutter unit • Defective master vacuum fans • Jammed master
SC213	Master Making Unit lock solenoid error	The master making unit lock sensor does not turn off after releasing the master making unit lock solenoid.	• Defective master making unit lock solenoid • Defective master making unit lock sensor.
Drum			
SC300	Main motor lock (1st drum position sensor does not turn on)	At power on or when the drum returns to home position, the 1st drum position sensor is not activated for more than 5 seconds after the main motor on signal is generated.	• Defective sensor • Defective main motor • Defective main motor drive board • Defective FU703+704 on the PSU • Damage gear of main motor
SC301	Main motor lock (motor control signal error)	The CPU on the motor control board detects an abnormal signal from the main motor encoder.	• Defective main motor • Defective main motor drive board
SC302	Main Motor lock (Drum Home position sensor error)	When the drum is at the home position, drum home position sensor does not turn on 3 continuous times.	• Defective sensor
SC303	Image shift motor lock (HP sensor error)	At power on, the sensor signal does not change for more than 12 seconds after the image shift motor on signal is generated.	• Defective sensor • Defective motor
SC304	Drum shift motor lock (HP sensor error)	At power on, the sensor signal does not change for more than 3 seconds after the drum shift motor on signal is generated.	• Defective sensor • Defective motor
SC305	Drum shift motor lock (no encoder pulse)	At power on or when the image side-to-side shift mode is selected, the CPU detects no encoder pulse from the sensor for more than 6 seconds after the drum shift motor on signal is generated.	• Defective sensor
SC306	Drum thermistor shut off	The signal from the thermistor cuts off.	• Thermistor circuit cut off
SC307	Hot Ink	The temperature of ink is more than 61 °C	• Thermistor short
SC308	Ink pump motor lock	The sensor signal does not change status after the ink pump motor on signal is generated for 8 seconds.	• Defective sensor • Defective motor • Defective ink pump

Code	Title	Conditions	Possible Causes
SC309	Pressure cam shift motor lock (A4 cam sensor remains on or off)	The sensor does not change status for more than 5 seconds after the pressure cam shift motor on signal is generated.	• Defective sensor • Defective motor
SC310	Pressure cam shift motor lock (A3 cam sensor remains off or on)	The sensor does not change status for more than 5 seconds after the pressure cam shift motor on signal is generated.	• Defective sensor • Defective motor
SC311	Pressure cam shift motor lock (HP sensor error)	When the motor is moving, the HP sensor is not activated more than 8.5 seconds	• Defective sensor • Defective motor
SC312	Pressure cam shift motor lock (Position sensor error)	When the motor is moving, the position sensor is not activated more than 8.5 seconds	• Defective sensor • Defective motor
SC313	Clamper motor lock (Clamper close position sensor error)	When the master clamper is being opened, the sensor is not activated after the clamper motor on signal is generated. The motor is not de-activated for more than 4 seconds	• Defective clamper close position sensor • Defective motor • Defective drum guide drive • Defective 2nd drum position sensor • Defective movement of clamper
SC314	Clamper motor Lock (Clamper open position sensor error)	When the master clamper is being opened, the sensor is not activated after the clamper motor on signal is generated. The motor is not de-activated for more than 4 seconds	• Defective clamper open position sensor • Defective motor • Defective drum guide drive • Defective 2nd drum position sensor • Defective movement of clamper
SC315	Idling roller motor lock	The motor does not activate for more than 4 seconds after the signal is generated.	• Defective idling roller • Defective motor • Defective sensor

Code	Title	Conditions	Possible Causes
Master Exit			
SC400	Pressure plate motor lock	The both pressure plate HP sensor and limit position sensor does not ON for more than 8 seconds after the pressure plate motor on signal is generated. The pressure plate does not reach home while traveling from the master eject ready position to the compression position for more than 3 seconds after the pressure plate motor on signal is generated. The pressure plate does not reach the home position from the pressure position for more than 6 seconds after the pressure plate motor on signal is generated. The pressure plate does not reach pressure prelate limit position for 4.5 seconds (A3) and 3.5 seconds (A4).	• Defective sensor • Defective motor • Jammed master
SC401	Master Eject Box lock solenoid error	The eject box lock sensor does not Off after lifting lock twice.	• Defective box lock solenoid • Defective sensor
Paper Delivery and Exit			
SC500	Feed pressure motor lock	The sensor does not change status for more than 6 seconds after the feed pressure motor on signal is generated.	• Defective feed pressure detection board • Defective feed pressure motor
SC501	Separation pressure motor lock	The sensor does not change status for more than 6 seconds after the separation pressure motor on signal is generated.	• Defective separation pressure detection board • Defective separation pressure motor
SC502	Feed encoder error	The CPU detects an abnormal signal from the feed encoder.	• Defective I/O board • Defective sensor • Defective encoder
SC503	Feed start sensor error	The sensor is not activated for more than 5 seconds after the main motor on signal is generated.	• Defective sensor
SC505	Friction pad shift motor lock	The sensor's status remains the same after the motor turns for 5 seconds.	• Defective sensor • Defective motor

SERVICE CALL CODE TABLE

Code	Title	Conditions	Possible Causes
SC506	Wing guide motor lock (Wing lower position error)	When the wing guide moves upwards, the sensor is not de-activated for more than 6 seconds after the wing guide motor on signal is generated. When the wing guide moves downwards, the sensor is not activated for more than 6 seconds after the wing guide motor on signal is generated.	• Defective sensor • Defective motor • Defective wing guide • Overrunning of the sensor slit
SC507	Wing guide motor lock (Wing Upper position error)	When the wing guide moves upwards, the sensor is not activated for more than 6 seconds after the wing guide motor on signal is generated. When the wing guide moves downwards, the sensor is not de-activated for more than 6 seconds after the wing guide motor on signal is generated.	• Defective sensor • Defective motor • Defective wing guide
SC508	Slider lift motor lock (paper sensor)	When the slider moves downwards, the sensor is not activated for more than 7 seconds after the slider lift motor on signal is generated. When the slider moves upwards, the sensor is not de-activated for more than 9 seconds after the slider lift motor on signal is generated.	• Defective sensor • Defective motor • Defective ECU baord • Motor belt has come off
SC509	Slider lift motor lock (Slider upper limit sensor)	When the slider moves upwards, the sensor is not activated for more than 9 seconds after the slider lift motor on signal is generated. When the slider moves downwards, the sensor is not de-activated for more than 9 seconds after the slider lift motor on signal is generated.	• Defective sensor • Defective motor • Defective ECU board • Mechanism blocked by foreign material
SC510	Job Separator motor lock (Slider HP sensor)	When the slider moves toward the delivery table, the sensor is not de-activated for more than 5 seconds after the job separator motor on signal is generated.	• Defective sensor • Defective motor • Defective ECU board • Mechanism blocked by foreign material
SC511	Job Separator motor lock (Slider position sensor)	When the slider returns, the sensor signal does not change status for more than 5 seconds after the job separator motor on signal is generated.	• Defective sensor • Defective motor • Defective ECU board • Mechanism blocked by foreign material • The cover pad over-runs its correct position

Code	Title	Conditions	Possible Causes
SC512	Registration Press Motor lock	The registration roller release sensor does not change the status for more than 3 seconds after the Registration press motor on signal is generated.	• Defective motor • Defective registration roller release sensor
SC520	Paper table lock (paper table lower limit sensor)	When the table moves upwards, the sensor does not change status for more than 7.5 seconds after the paper table motor on signal is generated.	• Defective sensor • Defective motor • Mechanism blocked by foreign material • Defective gear • A spring has come off
SC521	Paper table lock (paper table height sensor)	When the table moves upwards, the sensor does not change status for more than 7.5 seconds after the paper table motor on signal is generated.	• Defective sensor • Defective motor • Mechanism blocked by foreign material • Defective gear • A spring has come off
Electrical Components			
SC600	NVRAM (ECU) version differ	There is no version history in the program of NVRAM	• Miss the Firmware version up
SC601	Flash ROM (ECU) error	Upload error to Flash ROM	• Defective ECU
SC602	Ri10 error	Ri10 cannot be started, read, write.	• Defective ECU board
SC603	MSU error	The machine detects a failure in the memory control ASIC. The memory control ASIC cannot access to RAM normally.	• Defective ECU board • Replace the RAM on the ECU board
SC604	Make-up RAM error	The RAM for the make-up pattern data cannot be reset.	• Defective ECU
SC605	Shut off solenoid lock	Does not shut off for more than 6 seconds after the shut off solenoid on signal is generated.	• Defective main switch
SC670	Engine response error	After powering on the machine, a response is not received from the engine within the specified time.	• Loose connection between ACU and ECU board • Defective ECU board • Defective ACU board
SC672	Operation Panel Error	Operation panel does not display correctly.	• Defective software of ACU or panel • Defective ACU
Options			
SC720	Paper table motor lock – LCIT	The paper table upper limit sensor or lower limit sensor does not change the status for more than 15 seconds after the paper table motor on signal is generated.	• Defective sensor • Defective motor • Mechanism blocked by foreign material

SERVICE CALL CODE TABLE

Code	Title	Conditions	Possible Causes
SC725	Paper table motor lock – LCOT	The paper table upper limit sensor or lower limit sensor does not change the status for more than 15 seconds after the paper table motor on signal is generated.	• Defective sensor • Defective motor • Mechanism blocked by foreign material
ACU			
SC818	Watch-dog error	While the system program is running, other processes do not operate at all.	• Defective ACU board • Software error (ACU)
SC819	Kernel panic error	Processing cannot be continued by kernel	• Software error (ACU)
SC820	Self-Diagnostic Error: CPU	The central processing unit returned an error during the self-diagnostic test.	• ACU board defective • Software defective (ACU)
SC821	Self-Diagnostic Error: ASIC	The ASIC returned an error during the self-diagnostic test because the ASIC and CPU timer interrupts were compared and determined to be out of range.	• ACU board defective
SC822	Self-Diagnostic Error: HDD	The hard disk drive returned an error during the self-diagnostic test.	• HDD defective • HDD connector defective • ACU board defective
SC823	Self-diagnostic Error: NIC	The network interface control returned an error during the self-diagnostic test.	• Defective ACU board
SC824	Self-diagnostic Error: NVRAM	The resident non-volatile RAM returned an error during the self-diagnostic test.	• NVRAM of ACU board damaged or abnormal • ACU board defective • NVRAM socket damaged
SC826	Self-diagnostic Error: NVRAM	The NVRAM returned an error during the self-diagnostic test.	• NVRAM of ACU board defective
SC827	Self-diagnostic Error: RAM	The resident RAM returned a verify error during the self-diagnostic test.	• Defective ACU board
SC828	Self-diagnostic Error: ROM	The resident read-only memory returned an error during the self-diagnostic test.	• ACU board defective • Firmware defective (ACU)
SC829	Self-diagnostic Error: DIMM-RAM	The DIMM-RAM returned an error during the self-diagnostic test.	• DIMM-RAM defective • ACU board defective
SC835	Self-Diagnostic Error: Centro device	Loopback test error.	• Loopback connector not detected • IEEE1284 connector defective • ACU board defective
SC836	Self-diagnostic Error: Resident Font ROM	The resident font ROM returned an error during the self-diagnostic test.	• Defective ACU board
SC837	Self-diagnostic Error: Optional Font ROM	The optional font ROM returned an error during the self-diagnostic test.	• Defective ACU board
SC838	Self-diagnostic Error: Clock generator	The setting value of the clock generator is wrong	• Defective ACU board

Code	Title	Conditions	Possible Causes
SC850	Network I/F Abnormal	The IP address is the same as another device on the network	• Change the IP address • ACU board defective
SC851	IEEE 1394 I/F Abnormal	IEEE1394 interface error	• IEEE1394 interface board defective • ACU board defective
SC853	Wireless LAN card not detected	The wireless LAN card is not detected before communication is established, though the wireless LAN board is detected.	• Loose connection
SC854	Wireless LAN card not detected	The wireless LAN card is not detected after communication is established, though the wireless LAN board is detected.	• Loose connection
SC855	Wireless LAN card error	An error is detected in the wireless LAN card.	• Loose connection • Defective wireless LAN card
SC856	Wireless LAN board error	An error is detected in the wireless LAN board.	• Defective wireless LAN board • Loose connection
SC857	USB interface error	The USB interface cannot be used due to a driver error.	• Defective USB driver • Loose connection
SC860	Startup without HDD connection at main power on	The hard disk connection is not detected.	• Initialize HDD • Defective HDD • Damaged data
SC861	Startup without HDD detection at power switch on	The hard disk connection is not detected.	• Defective HDD • HDD connector loose or defective • Defective ACU
SC862	Maximum number of bad sectors detected on HDD	Up to 101 bad sectors have appeared in the area on the hard disk where image data is archived, and the hard disk may require replacement.	• Defective HDD
SC863	Startup without HDD data lead	Data stored on the hard disk is not read correctly.	• A bad sector occurred during operation of the HDD
SC864	HDD data CRC error	During operation of the HD, the HDD responded with a CRC error.	• Data transfer was abnormal in the data read from the HDD. • Defective HDD
SC865	HDD access error	The hard disk detected an error.	• Error detected other than the bad sectors error (SC863) or the CRC error (SC864)
ACU			
SC900	Electronic total counter error	The value of the total counter has already exceeded 9,999,999	• NVRAM of ACU board defective
SC920	Printer application error	An error is detected in the printer application program.	• Defective software • Unexpected hardware resource error (e.g., memory shortage)

SERVICE CALL CODE TABLE

Code	Title	Conditions	Possible Causes
SC990	Software performance error	The software attempted to perform an unexpected operation.	• Software of ACU defective • Internal parameter incorrect • Insufficient working memory
SC991	Software continuity error	The software attempted to perform and unexpected operation. However, unlike SC990, the object of the error is continuity of the software.	• Software bug • Internal parameter incorrect • Insufficient working memory
SC992	Undefined error	An undefined error has occurred.	-
SC998	Application start error	After power on the application does not start within 60 s. (All applications neither start nor end normally.)	• Software defective • An option required by the application (RAM, DIMM, board) is not installed

4.4 ELECTRICAL COMPONENT DEFECTS

	Jam Type
Paper feed	A Jam
Drum	B Jam
Paper eject	C Jam
Master feed	D Jam
Master eject	E Jam
ADF	P Jam
Paper remaining	A or B Jam

4.4.1 SCANNER

Name	State	Symptoms
Scanner HP sensor	The sensor stays on (detects that the scanner is in home position, but it is not)	If the sensor does not turn off two seconds after the main switch is turned on, SC100 occurs (defective scanner drive motor)
	The sensor stays off (detects that the scanner is not in home position, but it is)	If the sensor does not turn on 10 seconds after the main switch is turned on or the start button is pushed, SC100 occurs (defective scanner drive motor)
Original length / width sensors	Original not detected, but an original is present	The printed image shifts when Auto Reduce/Enlarge, image rotation, or image repeat is used
	Original detected, but no original is present	The printed image shifts when Auto Reduce/Enlarge, image rotation, or image repeat is used
Platen cover sensor	Detects that the cover is open, but the cover is closed	The machine will start after you push the Start button two times.
	Detects that the cover is closed, but the cover is open	The image in the border will be erased.

4.4.2 ADF

Name	State	Symptoms
Feed cover open sensor	Detects that the ADF cover is open, but it is closed	The machine displays “Close ADF cover” after the main switch is turned on.
	Does not detect that the ADF cover is open, but it is open	A P jam occurs, because the original is fed when the cover is open.
Registration sensor	Detects paper, but there is no paper	A P jam occurs after the main switch is turned on.

Name	State	Symptoms
	Does not detect paper, but there is paper	A P jam occurs after 5 seconds when the Start button is pushed
Original set sensor	Detects an original, but there is no original.	A P jam occurs when an original is put on the exposure glass. An original cannot be set again after last page of the job is fed, because the machine does not know that the last page of the original was fed, and the DF pick-up solenoid stays on. When A4 master saving mode is used, an A3 size master will not be wrapped on the drum at the end of the job, because the machine cannot detect the last page of the original.
	Does not detect an original, but there is an original	The machine displays " Set original" when the Start button is pushed. If the Start button is pushed again, the machine will scan the exposure glass.
Original width sensor	Detects an original, but there is no original	The machine detects that the width of the original is the widest possible size, and the image on the output shifts up or down.
	Does not detect an original, but there is an original.	The machine reads only one part of the image, and the image on the output shifts up or down.
Original length sensors 1 and 2	Detects an original, but there is no original	The machine makes a master of the maximum length. A4 master saving mode does not work because the sensor detects a long original. An original cannot be set again after last page of the job is fed, because the machine does not know that the last page of the original was fed, and the DF pick-up solenoid stays on.
	Does not detect an original, but there is an original.	The trailing edge of the printed image becomes blank and a feed out jam occurs
APS	Detects open, but close	The machine scans in platen mode instead of ADF mode.
	Detects close, but it is open	A P jam might occur. (It does not always occur.)
DF open sensor	Detects that the cover is open, but the cover is closed	The machine will start after you push the Start button two times.
	Detects that the cover is closed, but the cover is open	The image in the border will be erased.

4.4.3 MASTER MAKING UNIT

Name	State	Symptoms
Master end sensor	Detects a master on the roll, but no master is present	The machine will display 'master end' after master making. (In normal operation, 'master end' will be shown before master making.)
	Detects no master on the roll, but a master is present	The machine detects the end of the master roll and will not start to make a master
Master set sensor	Detect a master, but no master is present	If there is no master at the master set roller, the machine will show a D jam.
	Detects no master, but a master is present	The machine displays "set the master", but the master is set correctly.
Master edge sensor	Detect a master, but no master is present	A D jam will be displayed when the Start button is pushed (master clamp error)
	Detects no master, but a master is present	A D jam occurs because the machine tries to feed the master to the standby position; but a master is already there (master set error).
Platen release sensor	Stays on (detects that platen pressure is applied, but it is not)	If the sensor does not turn off 5 seconds after the start button is pushed, SC211 occurs (platen release motor lock).
	Stays off (detects that platen pressure is released, but it is applied)	If the sensor does not turn on 5 seconds after the start button is pushed or the platen release motor starts, SC211 occurs (platen release motor lock).
Cutter HP switch	Stays on (detects that the cutter is not at home position, but it is)	If the cutter HP switch does not turn off 3 seconds after the start button is pushed and the cutter motor starts, SC210 occurs (cutter unit error).
	Stays off (detects that the cutter is at home position, but it is not)	If the cutter HP switch does not turn off 3 seconds after the start button is pushed and the cutter motor starts, SC210 occurs (cutter unit error).
Master making unit lock sensor	Detects 'locked', but the unit is not locked	If the sensor does not turn off when the machine tries to release the lock, SC213 occurs.
	Detects 'unlocked', but the unit is locked	If the sensor does not turn on after the start button is pushed to try to lock the master making unit, the machine displays "master making unit is not set".

4.4.4 DRUM

Name	State	Symptoms
1st drum master sensor	Detects a master, but there is no master at the sensor	The machine displays "E jam" when master making is started. A paper upper wrapping jam occurs when printing is started.

Name	State	Symptoms
	Does not detect a master, but there is a master at the sensor	The machine displays “no master” after the main switch is turned on. After the Start button is pushed: • When a master is on the drum, another master will be wrapped around the drum. This means that two layers of master will be on the drum. • When there is no master on the drum, printing cannot be done.
2nd drum master sensor	Detects a master, but there is no master at the sensor	The trial print will cause an upper wrapping jam.
	Does not detect a master, but there is a master at the sensor	A master clamp error occurs.
1st drum position sensor (symptom after the main switch is turned on)	The sensor detects the drum is not at the 1st position, but it is	If the sensor does not turn off more than 3.74 seconds after the main switch is turned on, SC300 occurs (main motor lock)
	The sensor detects the drum is at the 1st position, but it is not	If the sensor does not turn on more than 3.74 seconds after the main switch is turned on, SC300 occurs (main motor lock)
1st drum position sensor (symptom during master making)	The sensor detects the drum is not at the 1st position, but it is	Drum rotation (low speed) will not stop when the Start button is pushed.
	The sensor detects the drum is at the 1st position, but it is not	SC313 (clamper lock) when the Start button is pushed
1st drum position sensor (symptom during printing)	The sensor detects the drum is not at the 1st position, but it is	Drum rotation will not stop when the Start button is pushed.
	The sensor detects the drum is at the 1st position, but it is not	Drum rotation will not stop when the Start button is pushed.
2nd drum position sensor (symptom after the main switch is turned on)	The sensor detects the drum is not at the 2nd position, but it is	Nothing happens after the main switch is turned on.
	The sensor detects the drum is at the 2nd position, but it is not	Nothing happens after the main switch is turned on.
2nd drum position sensor (symptom during master making)	The sensor detects the drum is not at the 2nd position, but it is	SC313 (clamper lock) when the Start button is pushed
	The sensor detects the drum is at the 2nd position, but it is not	The master eject mechanism will not stop when the Start button is pushed.
2nd drum position sensor (symptom during printing)	The sensor detects the drum is not at the 2nd position, but it is	An upper wrapping jam occurs when the Start button is pushed.

Name	State	Symptoms
	The sensor detects the drum is at the 2nd position, but it is not	The drum will not stop after one sheet of paper is fed when the Start button is pushed.
Drum home position sensor	The sensor detects the drum is not at the home position, but it is	The green LED stays lit and the red LED stays off.
	The sensor detects the drum is at the home position, but it is not	The green LED stays off and the red LED stays lit. SC302 (drum home position sensor error) occurs after the drum tries to move to home position 3 times when the front cover is opened and closed.
Thermistor	Short circuit	SC307 occurs immediately after the main switch is turned on.
	Broken wire	SC306 occurs immediately after the main switch is turned on.
Ink detection pin	Detects ink, but there is no ink	The printed image is patchy because ink is not supplied when the Start button is pushed.
	Does not detect ink, but ink is present	Excess ink is supplied, but the overflow sensor will detect the overflow and prevent the ink leakage. Replace or clean the ink detection pin
Ink cartridge set switch	Detects a cartridge, but no cartridge is present	The printed image will be pale, because the drum tries to supply ink without an ink cartridge.
	Does not detect a cartridge, but a cartridge is present	The machine displays “Set ink cartridge” after the main switch is turned on.
Drum shift sensor	Does not detect a signal	If a signal does not come from the encoder for 6 seconds, SC305 occurs (drum shift motor lock).
Drum shift HP sensor	Does not detect a signal	SC304 (drum shift motor lock) occurs if one of these two conditions occurs: • The drum does not go back to home position within 3 seconds. • The drum does not go to the requested drum shift position within 6 seconds.
Ink pump sensor	Stays on	If the sensor does not turn off, SC308 (ink pump motor lock) occurs.
	Stays off	If the sensor does not turn on, SC308 (ink pump motor lock) occurs.
Idling roller HP sensor	Stays on (detects that the idling roller is at home position, but it is not)	If the sensor does not turn off more than 4 seconds after the main switch is turned on, SC315 (idling roller motor lock) occurs.
		If the sensor does not turn on more than 4 seconds after the main switch is turned on, SC315 (idling roller motor lock) occurs.

4.4.5 MASTER EJECT

Name	State	Symptoms
Eject box set switch	Detects the box, but there is no box	There is no place to eject the master. Because of this, used masters will be ejected into the machine's cavity.
	Does not detect the box, but the box is installed	The machine displays "Set the master eject box", after the main switch is turned on.
Pressure plate limit position sensor	Does not detect the pressure plate	SC400 occurs if one of these things occurs: • The pressure plate limit position sensor or the pressure plate HP sensor do not turn on after more than 8 seconds. • The number of edges in the sensor signal is less than 4 when the masters are compressed for more than 6 seconds. • The movement between the position of print pressure and HP takes more than 6 seconds. • The movement between the master eject position and HP takes more than 3 seconds.
Pressure plate HP sensor	Does not detect the pressure plate at home position	SC400 occurs if one of these things occurs: • The pressure plate limit position sensor or the pressure plate HP sensor do not turn on after more than 8 seconds. • The number of edges in the sensor signal is less than 4 when the masters are compressed for more than 6 seconds. • The movement between the position of print pressure and HP takes more than 6 seconds. • The movement between the master eject position and HP takes more than 3 seconds.
Master eject sensor	Detects a master, but there is no master	A master eject error occurs.
	Does not detect a master, but there is a master	A master eject error occurs, but the master was ejected correctly.
Eject box lock sensor	Detects that the box is locked, but it is released	The eject box lock solenoid does not release the lock after the main switch is turned on or the security mode is canceled. SC401 occurs.

Name	State	Symptoms
	Detects that the box is not locked, but it is locked	The eject box lock solenoid does not lock the box after the main switch is turned on or the security mode is canceled. It is not possible to install the master eject box.

4.4.6 PAPER FEED

Name	State	Symptoms
Paper registration sensor	Detects paper, but there is no paper	A jam occurs after the main switch is turned on.
	Does not detect paper, but there is paper	A jam occurs when the Start button is pushed.
Paper feed timing sensor	Detects paper, but there is no paper	A jam occurs after the main switch is turned on.
	Does not detect paper, but there is paper	A jam occurs when the Start button is pushed.
Feed start sensor	Detect the actuator, but it is not there	SC503:
	Does not detect the actuator, but it is there	SC503:
Paper width detection board	Detects paper, but there is no paper	The printed image shifts if the paper width detection board detects the wrong paper size.
	Does not detect paper, but there is paper	The paper width detection board cannot detect the paper size.
Paper length sensor	Detects a long paper size, but it is not long paper	Pressure is applied between the drum and pressure cylinder after the trailing edge of the paper on the drum, and ink will transfer to the pressure cylinder.
	Does not detect a long paper size, but it is long paper	The image will be patchy near the trailing edge, because pressure is not applied near the trailing edge.
Paper table lower limit sensor	Detects the paper table, but it is not at the lower limit position.	If the sensor does not turn off more than 7.5 seconds after the paper feed table starts to move up, SC520 (paper feed lock) occurs.
	Does not detect the paper table at the lower limit position, but it is there.	The paper table motor does not stop at the lower limit position. If the sensor does not turn off more than 7.5 seconds after the paper feed table starts to move up, SC520 (paper feed lock) occurs.
Paper height sensor	Detects that the top of the stack is at the correct height for paper feed, but it is not.	A jam occurs because the paper feed table does not move up when the Start button is pushed.
	Detects that the top of the stack is not at the correct height for paper feed, but it is.	If the paper table does not stop within 7.5 seconds, SC521 (paper table motor lock) occurs.

Name	State	Symptoms
Paper table set sensor	Detects that the table is closed, but it is open.	The machine displays “Open the paper table” after the main switch is turned on.
	Detects that the table is open, but it is closed.	The paper table does not move up after the Print button is pushed.
Paper end sensor	Detects paper, but there is no paper	A jam occurs when the Print button is pushed.
	Does not detect paper, but there is paper	The machine displays “Add paper” after the main switch is turned on.
Feed pressure detection board	Detects pressure, but there is not.	The feed pressure detection board detects the pressure continually when the print button is pushed SC500: Feed pressure motor lock
	Does not detects pressure, but there is pressure.	The feed pressure detection board does not detect the pressure continually when the print button is pushed SC500: Feed pressure motor lock
Separation pressure detection board	Detects pressure, but there is not.	The separation pressure detection board detects the pressure continually when the print button is pushed. SC501: Separation pressure motor
	Does not detects pressure, but there is pressure.	The separation pressure detection board does not detect the pressure continually when the print button is pushed SC501: Separation pressure motor
Friction pad position sensor 1	Stays on (detects a friction pad, but one is not there)	If the sensor does not turn off for 5 seconds when the friction pad is changing to thick paper, SC505 occurs (friction pad shift motor).
	Stays off (does not detect a friction pad, but one is there)	If the sensor does not turn on for 5 seconds when the friction pad is changing to normal paper, SC505 occurs (friction pad shift motor).
Friction pad position sensor 2	Stays on (detects a friction pad, but one is not there)	A paper jam or double feed occurs, because the friction pad does not stop at the correct position.
	Stays off (does not detect a friction pad, but one is there)	If the sensor does not turn on for 5 seconds when the friction pad is changing, SC505 occurs (friction pad shift motor).

4.4.7 PRINTING AND PRESSURE CYLINDER

Name	State	Symptoms
Clamper open position sensor	Stays on (detects that clamper is open, but it is not)	If the sensor does not turn off when the clamper motor is opening and closing the clamper, SC314 (clamper motor lock) occurs.
	Stays off (detects that clamper is closed, but it is not)	If the sensor does not turn on when the clamper motor is opening and closing the clamper, SC314 (clamper motor lock) occurs.

Name	State	Symptoms
Clamper close position sensor	Stays on (detects that clamper is closed, but it is not)	If the sensor does not turn off when the clamper motor is opening and closing the clamper, SC313 (clamper motor lock) occurs.
	Stays off (detects that clamper is not closed, but it is)	If the sensor does not turn on when the clamper motor is opening and closing the clamper, SC313 (clamper motor lock) occurs.
Image shift HP sensor	Detects that the image shift mechanism is not at HP, but it is at HP.	If the sensor does not turn on for 12 seconds after the main switch is turned on, SC303 occurs.
	Detects that the image shift mechanism is at HP, but it is not.	If the sensor does not turn off for 12 seconds after the main switch is turned on, SC303 occurs.
Feed encoder	Does not detect the signal	SC502

4.4.8 PAPER EJECT

Name	State	Symptoms
Wing upper position sensor	Stays on (detects that the wing is at the upper position, but it is not)	If the sensor does not turn off when the wing guide motor moves down, SC507 (wing guide motor lock) occurs.
	Stays off (detects that the wing is not at the upper position, but it is)	If the sensor does not turn on when the wing guide motor moves up, SC507 (wing guide motor lock) occurs.
Wing lower position sensor	Stays on (detects that the wing is at the lower position, but it is not)	If the sensor does not turn off when the wing guide motor moves up, SC506 (wing guide motor lock) occurs.
	Stays off (detects that the wing is not at the lower position, but it is)	If the sensor does not turn on when the wing guide motor moves down, SC506 (wing guide motor lock) occurs.
Paper exit sensor	Detects paper, but there is no paper	A C jam occurs after the main switch is turned on.
	Does not detect paper, but there is paper	A paper upper wrapping jam occurs when the Print button is pushed.
A4 cam sensor	Stays on (detects the cam, but it is not at the A4 position)	If the cam does not move for 5 seconds when the Start button is pushed, SC309 (pressure cam shift motor) occurs.
	Stays off (does not detect the cam, but it is at the A4 cam position.	If the cam does not move for 5 seconds when the Start button is pushed, SC309 (pressure cam shift motor) occurs.
A3 cam sensor	Stays on (detects the A3 cam, but it is not at the A3 position)	If the cam does not move for 5 seconds when the Start button is pushed, SC310 (pressure cam shift motor) occurs.
	Stays off (does not detect the cam, but it is at the A3 cam position.	If the cam does not move for 5 seconds when the Start button is pushed, SC310 (pressure cam shift motor) occurs.
Lower wrapping jam sensor	Detect paper, but there is no paper.	The machine displays “lower wrapping jam” after the main switch is turned on.

Name	State	Symptoms
	Does not detect paper, but there is paper.	The machine displays “upper wrapping jam”, when a lower wrapping jam occurs.

4.4.9 PAPER SEPARATION

Name	State	Symptoms
Slider position sensor	Stays on (detects the slider, but it not there)	If the sensor does not turn off, SC511 occurs.
	Stays off (does not detect the slider, but it is there).	If the sensor does not turn on when the Start button is pushed, SC511 occurs during printing.
Paper sensor	Stays on (detects that the slider touched the paper, but it did not touch the paper)	If the sensor does not turn off, SC508 occurs.
	Stays off (does not detect the surface of paper)	If the sensor does not turn on, SC508 occurs.
Slider HP sensor	Stays on (detects the slider, but it is not at home position)	If the sensor does not turn off, SC510 (slider lift motor lock) occurs.
	Stays off (does not detect the slider, but it is at home position)	If the sensor does not turn on, SC510 (slider lift motor lock) occurs.
Slider upper limit sensor	Stays on (detects the slider, but it is not at the upper limit position.)	If the sensor does not turn off, SC509 occurs.
	Stays off (does not detect the slider, but it is at the upper limit position)	If the sensor does not turn on, SC509 occurs.

4.4.10 FUSES ON BOARDS

Name	State	Symptoms
F700 (PSU)	Open	The power supply does not turn on.
F703 and F704 6.3A (PSU)	Open	SC300: Main motor lock
F701 and F702 6.3A (PSU)	Open	24V is cut off SC300: Main motor lock
F1 12A (Main motor control board)	Open	SC300: Main motor lock

NOTE: F701 and F702, F703 and F704 are connected in parallel to protect the board. If one fuse is broken, the machine works if the other fuse does not break. But replace the broken fuse as soon as possible.

4.5 DIP SW, LED, VR, TP, AND FUSE TABLES

4.5.1 TEST POINTS

Ink Detection Board

Number	Usage
TP1	Ink Level
TP2	Ink Level
TP3, TP4	-12V

4.5.2 DIP SWITCHES

Ink Detection Board

Drum detection

DPS901	-1	-2	-3	-4
Standard A3/DLT Drum	ON	ON	OFF	OFF
Optional A3/DLT Drum	OFF	ON	OFF	OFF
Optional A4 Drum	ON	OFF	OFF	OFF
Not used	OFF	OFF	OFF	OFF

NOTE: 1) Do not turn the all the dip switches off, or the machine will detect that there is no drum.
2) Do not change DIPSW-3 because it is used for TC-IIR. If the setting is changed, an error could be displayed on the operation panel or there could be an effect on image quality.
3) DIPSW-4 is not used.

Color detection

DPS902	-1	-2
Color ID0 (Default)	OFF	OFF
Color ID2	ON	OFF
Color ID3	OFF	ON
Color ID4	ON	ON

ACU

SW2	OFF	ON
1	SD card boot	ROM boot
2	Normal boot	Boot only ROM monitor
3	Not used	Not used
4	Not used	Not used

NOTE: For normal operation, keep the all switches OFF

Number	SW	Setting
SW3	Push Switch	When the main switch is turned on while pushing SW3, the ACU board will go to the detailed self-check mode.

4.5.3 POTENTIOMETERS

I/O Board

Number	Usage
VR1	Master set sensor adjustment
VR2	Master Eject Sensor Adjustment
VR3	1st Drum Master Sensor Adjustment
VR4	Master End Sensor Adjustment (Do not adjust)
VR5	Master Edge Sensor Adjustment
VR6	2nd Drum Master Sensor Adjustment

Power Supply Board

Number	Usage
RV1	Thermal Head Voltage Adjustment
RV2	+5VE Voltage Adjustment (Do not adjust)

Ink Detection Board

Number	Usage
VR901	Ink Detection Board Adjustment (see section 3.8.7)

4.5.4 LED'S

MPU

Number	Function
LED1	Monitors the RAM and SARM operation on the CPU. This LED is lit if there is a problem.
LED2	Monitors the CPU operation. Usually, this LED is blinking.

I/O Board

Number	Function
LED1	Monitors the CPU operation. Usually, this LED is blinking.

ACU

Number	Function
LED1	Monitors the CPU operation. Usually, this LED is blinking.

Operation Panel

Number	Function
LED101	This LED is blinking in normal operation During firmware download: quick blink After firmware download: slow blink
LED102	During firmware download: quick blink After firmware download: slow blink

NOTE: The Green LED of the start button on the operation panel displays the status of firmware downloading in normal; therefore, it is not necessary to open the operation panel.

4.5.5 FUSES

Power Supply Unit

Fuse	Rated Current	Protect
F700	10A	Power Supply Unit
F701/ F702	6.3A x 2	I/O Board
F703/ F704	6.3A x 2	Main Motor Drive Board
F705	2A	Not used

NOTE: F701 and F702, F703 and F704 are connected in parallel to protect the board. If one fuse is broken, the machine works if the other fuse does not break. But replace the broken fuse as soon as possible.

Main Motor Drive Board

Fuse	Rated Current	Protect
F1	12A	Main Motor

I/O Board

Fuse	Protect
FU1	Not used
FU2	Transport Suction Fan / Air Knife Fan
FU3	Air Knife Fan
FU4	+5V Voltage

SERVICE TABLES

5. SERVICE TABLES

5.1 SERVICE REMARKS

5.1.1 SCANNER SECTION

1. Xenon Lamp

Do not touch the xenon lamp while it is on, or you might receive a weak electrical shock.

2. Scanner Wire Installation

A special tool is needed. See “3.3.5 Scanner Wires”.

3. Sensor Board Unit (SBU) Calibration

When the ECU is replaced or the standard white plate located behind the original scale is replaced, the SBU must be calibrated with SP6-005-1.

5.1.2 MASTER EJECT SECTION

1. Master Pick-up Roller Drive Gear and Master Clamper Drive Arm Positions

These parts must be positioned correctly. See "3.6.6 Reassembling the Master Pick-up Roller Drive Gears".

5.1.3 MASTER FEED SECTION

1. Thermal Head 1

When installing the thermal head, there are important points to note. See "Remarks for Handling the Thermal Head" in "6.4.1 Thermal Head."

2. Thermal Head 2

When replacing the thermal head, be sure to adjust the voltage supplied to the thermal head (See “3.7.15 Thermal Head Voltage Adjustment”).

3. Master Vacuum Fan Position

The fan must be positioned correctly. See section 3.7.8.

4. Master Feed Mylar Positions

When replacing or removing the thermal head, the cutter unit, the master duct, or the guide plate of the lower master feed control roller, the strips of mylar are easily put in the wrong position while installing the lower tension roller or lower master feed control roller. For details, refer to "3.7.22 Master Feed Mylar Positioning".

5.1.4 PAPER FEED SECTION

1. Paper Pick-up Roller and Paper Feed Roller 1

Be careful to install the rollers the correct way around. They have a one-way clutch inside.

2. Paper Pick-up Roller and Paper Feed Roller 2

Do not touch the surfaces of the rollers with bare hands.

5.1.5 DRUM AND DRUM DRIVE SECTION

1. Doctor Roller

Normally the doctor roller gap is not adjusted or changed. It tends to be difficult to adjust in the field. If the gap becomes narrower, an uneven image may appear on the prints. If it becomes wider, too much ink will be applied to the drum screens, resulting in ink leakage from the drum.

2. Drum Master Clamper

1) Do not allow the inside of the clamping plate to become dirty with ink.
2) Do not use alcohol or other solvents to clean the inside of the clamping plate. Use a cloth dampened with water.

3. Ink Roller Unit

Do not disassemble the ink roller unit. Each part between the front and rear side plates of this unit has been precisely adjusted on the production line to keep the doctor and ink rollers parallel against the drum shaft.

5.1.6 MAIN DRIVE SECTION

1. Main Drive Adjustment

Special tools are needed for the adjustment. For details, see "3.11.2 Main Drive Mechanism (Main Timing Belt)".

5.1.7 ELECTRICAL COMPONENTS

1. ECU and I/O Boards

After replacing the ECU or I/O board, some adjustments are needed. See "3.5.5 ECU and I/O Board Replacement".

2. ACU, ECU, and Power Supply Unit

To access the rear of the machine, the ACU, ECU, and I/O board have to be moved out of the way. See "3.5.1 ACU, ECU, and PSU Opening Procedures".

3. Power Supply Unit

When replacing the power supply unit, be sure to adjust the voltage supplied to the thermal head. See “3.7.15 Thermal Head Voltage Adjustment”.

4. Program Update

To update the machine’s software, an SD card is needed. Follow all cautions in the procedures in the manual.

5. Sensor Adjustments

Adjustment is needed for the following sensors (SP6-4)

- Master eject sensor
- Master end sensor
- Master edge sensor
- Master set sensor
- 1st drum master sensor
- 2nd drum master sensor

For details, see the adjustment procedures for each sensor in section 3.

5.2 SPECIAL TOOLS

The following are the special tools used for service.

Description	Part Number	Application
Main Drive Securing Tool Kit (Drum securing tool and two positioning shafts as a set)	C229 9000	For main drive positioning
Scanner Positioning Pin Kit (4 pins as a set)	A006 9104	For scanner wire installation
SD Card	B6455010	For updating firmware
PCMCIA Card Adapter	B6456700	For upload the data into an SD card
USB Reader/Writer	B6456800	For upload the data into an SD card

5.3 TOUCH PANEL POSITION ADJUSTMENT

NOTE: It is necessary to calibrate touch panel at the following times:

- When you replace the operation panel.
- When you replace the controller board.
- When the touch panel detection function does not operate correctly

Do not use items [2] to [9] on the Self-Diagnostic Menu. These items are for design use only.

1. Press [◇], press ①⑨⑨③, press (C/⊘) 5 times to open the Self-Diagnostics menu.

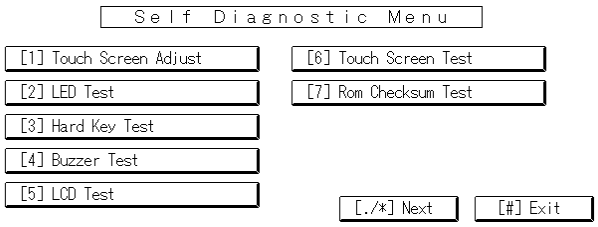

2. On the touch screen press “Touch Screen Adjust” (or press ①).
3. Use a pointed (not sharp) tool to press the upper left mark ○↖.

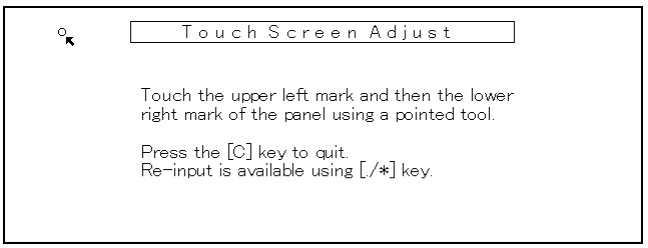

4. Press the lower right mark when “↘○” shows.
5. Touch a few spots on the touch panel to make sure that the marker “**+**” shows exactly where the screen is touched.

   Press Cancel. Then start from Step 2 again if the “**+**” mark does not show where the screen is touched.
6. Press [#] OK on the screen (or press (#)) when you are finished.
7. Touch [#] Exit on the screen to close the Self-Diagnostic menu. Save the calibration settings.

Service Tables

5.4 SERVICE PROGRAM MODE

The service program (SP) mode is used to check electrical data, change modes, or change adjustment values.

⚠CAUTION
Make sure that the data-in LED (⇨) is not on before you go into the SP mode. This LED indicates that some data is coming to the machine. When the LED is on, wait for the machine to process the data.

5.4.1 ENABLING AND DISABLING SERVICE PROGRAM MODE

NOTE: The Service Program Mode is for use by service representatives only. If this mode is used by anyone other than service representatives for any reason, data might be deleted or settings might be changed. In such case, product quality cannot be guaranteed any more.

Entering SP Mode

1. Press the Clear Modes key.
2. Use the keypad to enter “107”.
3. Hold down Clear/Stop for at least 3 seconds.
4. Enter the Service Mode.

Exiting SP Mode

Exit

5. Press Exit on the display panel twice to return to the copy window.

5.4.2 TYPES OF SP MODES

Copy/System SP	SP modes related to the engine functions
Printer SP	SP modes related to the printer functions

Select one of the Service Program modes (Copy/System or Printer) from the touch panel as shown in the diagram below, after you access the SP mode.

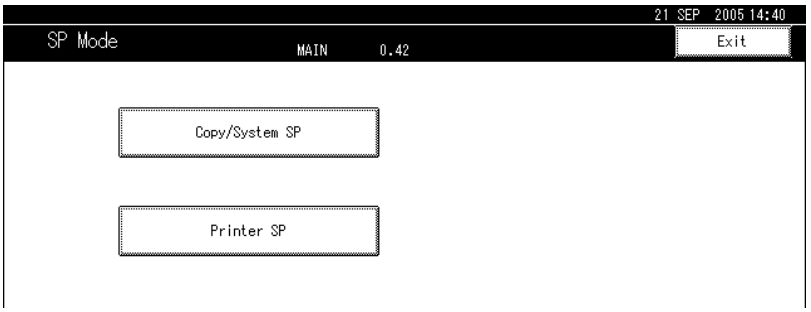

SP Mode Button Summary

Here is a short summary of the touch-panel buttons.

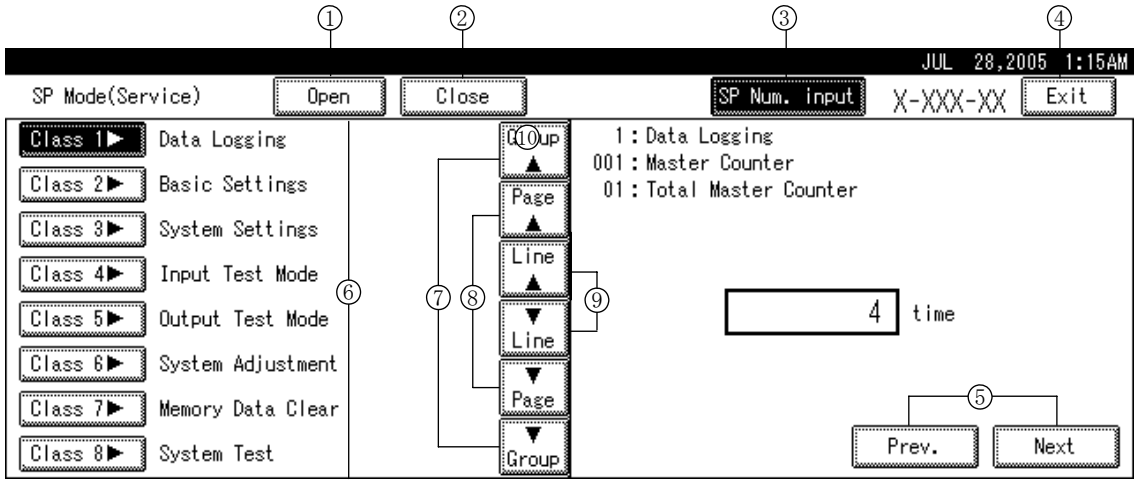

① Opens all SP groups and sublevels.

② Closes all open groups and sublevels and restores the initial SP mode display.

③ Enter the SP code directly with the number keys if you know the SP number. Then press ⓗ. (The required SP Mode number will be highlighted when pressing ⓗ. If not, just press the required SP Mode number.)

④ Press two times to leave the SP mode and return to the copy window to resume normal operation.

⑤ Press to move the highlight on the left to the previous or next selection in the list.

⑥ Press any Class 1 number to open a list of Class 2 SP modes.

⑦ Press to scroll the show to the previous or next group.

⑧ Press to scroll to the previous or next display in segments the size of the screen display (page).

⑨ Press to scroll the show the previous or next line (line by line).

Selecting the Program Number

Program numbers have two or three levels.

1. Refer to the Service Tables to find the SP that you want to adjust before you begin.
2. Press the Group number on the left side SP Mode window that contains the SP that you want to adjust.
3. Use the scrolling buttons in the center of the SP mode window to show the SP number that you want to open. Then press that number to expand the list.
4. Use the center touch-panel buttons to scroll to the number and title of the item that you want to set and press it. The small entry box on the right activates and shows the below default or the current settings.

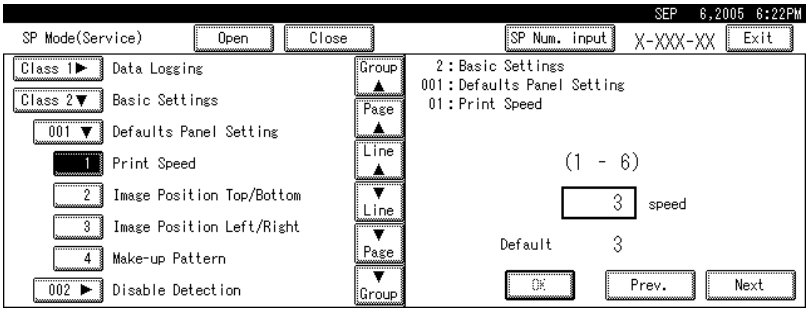

NOTE: Refer to the Service Tables for the range of allowed settings.

5. Do this procedure to enter a setting:
   - Press ⊙ to toggle between plus and minus before using the keypad to enter the appropriate number. The number you enter writes over the previous setting.
   - Press # to enter the setting. (The value is not registered if you enter a number that is out of range.)
   - Press “Yes” when you are prompted to complete the selection.
6. Press Exit two times to return to the copy window when you are finished.

Exiting Service Mode

Press the Exit key on the touch-panel.

5.4.3 SERVICE PROGRAM TABLE

Main Menu Number List

No.	Menu	Description
1	Data Logging	Various counters and logged data
2	Basic Settings	Various settings
3	System Settings	Settings used at installation
4	Input Test Mode	Sensor on/off status check
5	Output Test Mode	Motors and other components on/off check
6	System Adjustment	Various adjustments
7	Memory Data Clear	Resets or clears the SP mode data
8	System Test	Various data printouts and system tests
9	Printer Controller	Controller data print out and System tests

NOTE: 1) In this model, the User Tool settings cannot be accessed with SP mode.
2) The SP mode items for the optional units (such as the LCS) do not appear when the unit is not installed (e.g. SP 1-19).

1. Data Logging

No.	Display	No.	Menu	Function
1-1	Master Counter	1	Total Master Counter	Total master counter.
		2	Total Master Counter - ADF	Master counter made in ADF mode.
1-2	Master Counters - size	1	A3/DLT	Master counters for each original size used. '-L': Lengthwise feed (SEF)
		2	B4/LG	
		3	A4-L/LT-L	
		4	A4/LT	
		5	B5-L	
		6	B5	
		7	Other Size	
1-3	Master Counter – Original Type	1	Letter Mode	Master counters for each original type used.
		2	Letter/Photo Mode	
		3	Photo Mode	
		4	Pencil Mode	
		5	Tint Mode	
1-4	Master Counter - Paper Type	1	Standard Paper	Master counters for each paper type used.
		2	Thick Paper	
		3	Thin Paper	
		4	Special	
		5	User Setting 1	
		6	User Setting 2	
1-5	Master Counter - Copy Mode	1	Economy Mode 1	Master counters for various copy modes.
		2	Economy Mode 2	
		3	Combine 2 Originals	
		4	Combine 4 Originals	
		5	2 Repeat Image	
		6	4 Repeat Image	
		7	8 Repeat Image	
		8	16 Repeat Image	
		9	Custom Repeats	
		10	Enlargement Mode	
		11	Reduction Mode	
		12	Zoom Mode	
		13	Directional Magnification	
		14	Auto Magnification	
		15	Slight Reduction	
		16	Make-up Mode	
		17	Original Margin Erase	
		18	Original Margin Erase - Paper	
		19	Centering	
		20	Online Mode	
		21	Scanner Overlay - Scanner	
		22	Scanner Overlay - Online	
		23	Scanner Overlay – (Stored)	

No.	Display	No.	Menu	Function
		24	Format Overlay - Scanner	
		25	Format Overlay – (Stored)	
		26	Default Stamp	
		27	Up/Down shift	
		28	Side Shift	
		29	Short Master	
		30	Image Rotation	
		31	Class - Class	
		32	Class – Separate per Original	
		33	Class – Separate Prints	
		34	Class – Year/Class	
		35	Job Separator	
		36	Auto Cycle	
		40	Online Sort	
		41	Stored File	
		42	Stored File - Web	
1-8	Print Counter	1	Total Print Counter	Total print counter.
		2	Color Drum – Other	Print counter made with the optional color drums.
		3	Color Drum – Red	
		4	Color Drum – Blue	
		5	Color Drum – Green	
		6	Color Drum – Brown	
		7	Color Drum – Gray	
		8	Color Drum – Yellow	
		9	Color Drum - Purple	
		10	Color Drum - Maroon	
		11	Color Drum – Navy	
		12	Color Drum - Orange	
		13	Color Drum – Hunter Green	
		14	Color Drum – Reddish	
		15	Color Drum – Bluish	
		16	Color Drum – Yellowish	
1-9	Print Counter - Size	1	Over A3/DLT	Print counters for each paper size used. '-L': Lengthwise feed
		2	A3/DLT	
		3	B4/LG	
		4	A4-L/LT-L	
		5	A4/LT	
		6	B5-L	
		7	B5	
		8	A6-L	
		9	Under A6-L	
		10	Other Size	
1-10	Print Counter - Paper Type	1	Standard Paper	Print counters for each paper type used.
		2	Thick Paper	
		3	Thin Paper	
		4	Special	

No.	Display	No.	Menu	Function
		5	User Setting 1	
		6	User Setting 2	
1-13	Copies per Orig Counters	1	1 - 3 Prints	Print counter per original.
		2	4 - 5 Prints	
		3	6 - 10 Prints	
		4	11 - 20 Prints	
		5	21 - 30 Prints	
		6	31 - 50 Prints	
		7	51 - 70 Prints	
		8	71 - 100 Prints	
		9	101 - 200 Prints	
		10	201 - 500 Prints	
		11	501 - 1000 Prints	
		12	1001 - 2000 Prints	
		13	2001 - 3000 Prints	
		14	3001 - 4000 Prints	
		15	4001 - 6000 Prints	
		16	6001 - 8000 Prints	
		17	8001 - 10000 Prints	
		18	More than 10000 Prints	
1-14	Counter/Ratio	1	Master Set Error	Counters for various types of jams. Jam ratios are also displayed.
		2	Master Clamp Error	
		3	Master Cut Error	
		4	Master Eject ON Check	
		5	Master Pressure Plate Error	
		6	Master Eject OFF Check	
		7	Paper Registration ON Check	
		8	Paper Feed Timing ON Check	
		9	Paper Feed Timing OFF Check	
		10	Paper Upper Wrapping	
		11	Paper Lower Wrapping	
		12	Paper Exit OFF Check	
		13	DF Feed-in Error	
		14	DF Feed-out Error	
		15	Master Duct OFF Check	
1-15	Feed - In/Reg Roller Jams	1	Jam P0 Standard 60rpm	Feed-in jams and registration roller jams for various paper sizes and paper types.
		2	Jam P0 Standard 75rpm	
		3	Jam P0 Standard 90rpm	
		4	Jam P0 Standard 105rpm	
		5	Jam P0 Standard 120rpm	
		6	Jam P0 Standard 135rpm	
		7	Jam P0 Thick 60rpm	
		8	Jam P0 Thick 75rpm	

No.	Display	No.	Menu	Function
		9	Jam P0 Thick 90rpm	
		10	Jam P0 Thick 105rpm	
		11	Jam P0 Thick 120rpm	
		12	Jam P0 Thick 135rpm	
		13	Jam P0 Thin 60rpm	
		14	Jam P0 Thin 75rpm	
		15	Jam P0 Thin 90rpm	
		16	Jam P0 Thin 105rpm	
		17	Jam P0 Thin 120rpm	
		18	Jam P0 Thin 135rpm	
		19	Jam P0 Others 60rpm	
		20	Jam P0 Others 75rpm	
		21	Jam P0 Others 90rpm	
		22	Jam P0 Others 105rpm	
		23	Jam P0 Others 120rpm	
		24	Jam P0 Others 135rpm	
		25	Jam P1 Standard 60rpm	Registration roller jams (when the paper feed timing sensor stays on) for various paper sizes and paper types.
		26	Jam P1 Standard 75rpm	
		27	Jam P1 Standard 90rpm	
		28	Jam P1 Standard 105rpm	
		29	Jam P1 Standard 120rpm	
		30	Jam P1 Standard 135rpm	
		31	Jam P1 Thick 60rpm	
		32	Jam P1 Thick 75rpm	
		33	Jam P1 Thick 90rpm	
		34	Jam P1 Thick 105rpm	
		35	Jam P1 Thick 120rpm	
		36	Jam P1 Thick 135rpm	
		37	Jam P1 Thin 60rpm	
		38	Jam P1 Thin 75rpm	
		39	Jam P1 Thin 90rpm	
		40	Jam P1 Thin 105rpm	
		41	Jam P1 Thin 120rpm	
		42	Jam P1 Thin 135rpm	
		43	Jam P1 Others 60rpm	
		44	Jam P1 Others 75rpm	
		45	Jam P1 Others 90rpm	
		46	Jam P1 Others 105rpm	
		47	Jam P1 Others 120rpm	
		48	Jam P1 Others 135rpm	
		49	Jam P2 Standard 60rpm	Upper wrap, lower wrap, and feed-out jams for various paper sizes and paper types.
		50	Jam P2 Standard 75rpm	
		51	Jam P2 Standard 90rpm	

No.	Display	No.	Menu	Function
		52	Jam P2 Standard 105rpm	
		53	Jam P2 Standard 120rpm	
		54	Jam P2 Standard 135rpm	
		55	Jam P2 Thick 60rpm	
		56	Jam P2 Thick 75rpm	
		57	Jam P2 Thick 90rpm	
		58	Jam P2 Thick 105rpm	
		59	Jam P2 Thick 120rpm	
		60	Jam P2 Thick 135rpm	
		61	Jam P2 Thin 60rpm	
		62	Jam P2 Thin 75rpm	
		63	Jam P2 Thin 90rpm	
		64	Jam P2 Thin 105rpm	
		65	Jam P2 Thin 120rpm	
		66	Jam P2 Thin 135rpm	
		67	Jam P2 Others 60rpm	
		68	Jam P2 Others 75rpm	
		69	Jam P2 Others 90rpm	
		70	Jam P2 Others 105rpm	
		71	Jam P2 Others 120rpm	
		72	Jam P2 Others 135rpm	
1-18	Paper Jam – LCS	1	Paper Feed – LCIT	
1-19	Other Counter	1	Set Master	
		2	Ejected Master	
		3	Ink Pump Rotation	
		4	Master End	
		5	Ink End	
		6	Master Eject Box Full	Number of times the eject master box is full.
		7	Original Counter ADF	The total number of times the ADF was used.
		8	Original Counter Platen	The total number of times the platen was used.
		9	Misfeed Setting Counter	Number of times the user changed the ‘Misfeed’ setting for paper feed or separation pressures.
		10	Multi feed Setting Change	Number of times the user changed the ‘Double Feed’ setting for paper feed or separation pressures.
		11	Start Error Message	Number of times an error message appeared when the Start key was pressed.

No.	Display	No.	Menu	Function
		12	Stored File Counter	Number of times the user stored an original with the scanner, without printing immediately.
		13	Stored File Counter	Number of times the user stored an original by sending it from a PC.
1-19	Machine Information	1	Serial Number	Displays serial numbers of the machine and options.
		2	ROM Versions and Serial Number	Displays the ROM number and serial number of the machine and options.
		3	Power On Time	Displays the time that power was turned on.
		4	Counter - Read Only	Displays the Electrical Counter. It cannot be reset.
1-20	Service Information	1	Telephone Number for Service	Enter data with SP3-1-6 at installation if required.
		2	Service Call Counter	Displays the latest 40 Service Call codes.
1-21	Double Feed Counter	1	From Paper Table 60rpm	The number of double feeds from the paper table.
		2	From Paper Table 75rpm	
		3	From Paper Table 90rpm	
		4	From Paper Table 105rpm	
		5	From Paper Table 120rpm	
		6	From Paper Table 135rpm	
		7	From Tray 1 60rpm	
		8	From Tray 1 75rpm	
		9	From Tray 1 90rpm	
		10	From Tray 1 105rpm	
		11	From Tray 1 120rpm	
		12	From Tray 2 60rpm	
		13	From Tray 2 75rpm	
		14	From Tray 2 90rpm	
		15	From Tray 2 105rpm	
		16	From Tray 2 120rpm	
1-22	Sales Mode Check	1	Save Ink In Sorter Mode	Do not use (Japanese version use only).
		2	Japanese Display Type	
		4	Ink Supply Pre-Printing	
		5	Color Drum ID0	
		6	Color Drum ID1	
		7	Color Drum ID2	
		8	Color Drum ID3	
		9	Optional Type Counter	
		10	Count Up Timing	
		11	Print Per Count	
		12	Count Timing	
		13	Max Free Print Per Master	
		14	Job Separation	

No.	Display	No.	Menu	Function
		15	Set Key Counter	
		16	Paper Delivery Table	
		17	Main Scan Position - DF	
		18	Scan Start Position - DF	
		19	Scanning Speed – DF	
		20	Printer Settings Clear	
		21	NIB NVRAM Clear	
		22	HDD Format – All Areas	
		23	HDD Format – Picture Files	
		24	HDD Format - Fonts Data	
		25	HDD Format – Job Log Data	
		27	Vender Selection	
		28	Ghost Image Removal	
		29	Drum Ink Exhaust	
1-25	Parts Exchange History	1	Drum Screen	The record of the PM parts replaced. When you do SP3-4 after you replace the PM parts, the data is stored here.
		2	Paper Clamper	
		3	Feed Pressure	
		4	Separation Pressure	
		5	Friction Pad A	
		6	Friction Pad B	
		7	Eject Velt.	
		8	Bank Feed Pressure	
		9	Bank Separation Pressure	
		10	Bank Friction Pad	

2. Basic Settings

No.	Display	No.	Menu	Function	De-fault	Setting
2-1	Defaults User Setting	1	Print Speed	See Note 1.	3	1 to 6
		2	Image Position Top/Bottom	See Note 3.	0	-15.0 to 15.0 mm
		3	Def Image Position Left /Right		0	-10.0 to 10.0 mm
		4	Make-up Pattern 1		1	1 to 40
2-2	Disable Sensors	1	Ink Detection	Enables/disables various sensors for test purposes.	ON	ON/OFF
		2	Paper Length Detection		ON	ON/OFF
		3	Paper Size Detection		ON	ON/OFF
		4	Drum Master Detection		ON	ON/OFF
		5	Platen Cover Set Detection		ON	ON/OFF
		6	ADF Close Detection		ON	ON/OFF
2-4	Destination Setting	1	Machine Code Setting	See Note 2.	-	-
		3	Drum Selection	See Note 3.	-	DLT/A3
		4	Machine Destination		-	0:Japan, 1:North America, 2:Europe, 3:China
		5	Vendor Selection		-	Different depends on the destination
2-5	Thermal Head Energy Settings	1	Ink Temp Control – Black	See Note 4.	ON	ON/OFF
		3	Standard - Black	Thermal head energy in standard and economy modes, as percentage of full power.	7	0 to 50%
		4	Economy Mode 1 - Black		17	0 to 50%
		5	Economy Mode 2 – Black		27	0 to 50%
		11	Ink Temp Control – Color	See Note 4.	ON	ON/OFF
		13	Standard - Color	Thermal head energy in standard and economy modes, as percentage of full power.	7	0 to 50%
		14	Economy Mode 1 - Color		17	0 to 50%
		15	Economy Mode 2 - Color		27	0 to 50%
2-6	Other Setting	1	APS/A5 Size Detection	See Note 5.	No	0:No 1:Yes

No.	Display	No.	Menu	Function	De-fault	Setting
		3	A3 Master 2 Count Up	See Note 6.	0	0:One count up 1:2 count up – Master 2:2 count up – Master and Paper
		4	Num of Master Eject Attempt Trial	This specifies the number of master eject attempts before an error is indicated. See Note 7.	1	1 to 3
		5	Auto Master Save Select	See Note 8.	Auto	1: Off 0: Auto
		6	Ink Supply/Trial Print	ON: Ink is supplied while a trial print is made after making a new master.	OFF	ON/OFF
		7	Ink Auxiliary Supply Timing	See Note 9.	After	0:After 1: Before 2: No
		8	Ghost Image Removal	See Note 10		On/OFF
		14	TH Writing Mode	See Note 11.	OFF	On/OFF
		15	TH Swinging Quantity	See Note 11.	2	1 to 5mm
		16	Print Pressure Constance Mode	See Note 12.	OFF	On/OFF
		17	Print Pressure in Adjust	See Note 12.	3	0 to 6
		18	Print Pressure Shift Adjust	See Note 13.	0	-2 to 2
		20	135rpm Limit	ON (default): 135 cpm is disabled for B4 SEF or longer. See Note 14.	ON	On/OFF
		21	Image Shift Correction – 60rpm	Adjust these SPs if there are differences in the image position for different print speeds.	0	0 to 12
		22	Image Shift Correction – 75rpm		0	0 to 12
		23	Image Shift Correction – 90rpm		0	0 to 12
		24	Image Shift Correction – 105rpm		0	0 to 12
		25	Image Shift Correction – 120rpm		4	0 to 12
		26	Image Shift Correction – 135rpm		6	0 to 12
		27	Ink Exhaust Drum	See Note 15.	OFF	On/OFF
		28	No Image Master On Drum Number	See Note 15.	1	1 to 10

No.	Display	No.	Menu	Function	De-fault	Setting
⇒ 2-6 con'd		30	Master Compression Time A3/DLT **NOTE**: Before this SP mode, the master eject box was full at 120 masters.	To adjust the maximum number of masters that can be put in the master eject box. This allows the "Full" condition to occur earlier, so he master eject box is not heavy when the user empties it. **NOTE**: Requires ACU (C2625174C) and ECU (C2622511B) firmware.	-	0 - 120 1 - 100 2 - 90 3 - 70
		31	Master Compression Time A4		-	0 - 160 1 - 130
2-08	CC Call	1	Jam Detection – Time Length		15	3-30
		2	Door Open – Time Length		15	3-30
		3	Continuous Master Jam Cnt		2	2-10
		4	Continuous Paper Jam Cnt		3	2-10
2-09	Supply Alarm	1	Supply Alarm		OFF	On/OFF
		2	Master End Alarm		OFF	On/OFF
		3	Master End Alarm Count		1	1-2
		4	Ink End Alarm		OFF	On/OFF
		5	Ink End Alarm Count		3	1-5
2-10	Color Drum ID Setting	1	ID 0	Use this SP to assign colors to the drum ID numbers. For details, see 'Drum – Ink Supply and Kneading – Color Drum ID Detection' in Detailed Section Descriptions. Also see Note 16.	Other	15 colors
		2	ID 1		Other	15 colors
		3	ID 2		Other	15 colors
		4	ID 3		Other	15 colors
2-12	IEEE 802.11b Setting	1	Channel Range Upper Limit		11	1 to 14
		2	Channel Range Lower Limit		1	1 to 14

Notes

1: 2-1-1 (Default print speed, cpm)

1: 60, 2: 75, 3: 90, 4: 105, 5: 120, 6: 135

2: 2-4-1 (Machine Code Setting)

By entering the machine code (e.g. for C262-52, input 262-52), the following values go to the factory settings for that model:

- Machine destination (SP2-4-4)
- Display language
- Drum Selection (SP2-4-3)
- Vendor selection (SP2-4-5)

NOTE: 262-17: Ricoh North America
262-27: Ricoh Europe

* Use the point (**.**) key to enter '-.'

3: 2-4-3 (Drum Selection – A3 or DLT)

To detect the size of the drum, the machine refers to the dip switch settings on the drum. But A3 and DLT have the same dip switch configuration. Then the machine uses this SP to tell the difference between A3 and DLT.

The drum size detected by the machine changes the master making area. It also affects the available range for the default image position shift (top/bottom, SP2-1-2).

NOTE: There is no A4 setting for this SP, because the machine automatically detects an A4 drum by the dipswitch setting, and adjusts the master making area and image shift accordingly.

Drum Selection	Range that can be set (SP2-1-2)
DLT Drum	-10 mm to + 10 mm (0.25mm)
A3 Drum	-15 mm to + 15 mm (0.25mm)
A4 Drum	-15 mm to + 15 mm (0.25mm)

CAUTION: For the DLT drum, the display shows -15 mm to + 15 mm. But you must enter a value in the range of -10 mm to + 10 mm.

4: 2-5 (Thermal Head Energy Saving)

If Ink Temp Control – Black (SP2-5-1) or Color (2-5-11) are switched on, the energy supplied to the thermal head will depend on the temperature of ink measured by the thermistor in the drum, as shown by the formulas in the table below. This setting can be adjusted for Black and Color separately.

Thermal head energy settings used in the formulas:

[Y]: Standard

Black (SP2-5-3): 7%

Color (SP2-5-13): 7%

[Z]: Economy Mode 1

Black (SP2-5-4): 17%

Color (SP2-5-14): 17%

[Z]: Economy Mode 2

Black (SP2-5-5): 27%

Color (SP2-5-15): 27%

[T]: The temperature of the ink

Drum	Ink Temp Control (SP2-5-1, 11)	Mode	Less than 20 ºC	20 ºC or more
Black/Color	ON (Default)	Standard	-Y%	-(Y+(T-20) x2)% The limit is 23%
		Economy 1	-(Y+Z)%	-(Y+(T-20) x2+Z)% The limit is 40%
		Economy 2	-(Y+Z)%	-(Y+(T-20) x2+Z)% The limit is 50%
	OFF	Standard	-Y%	
		Economy 1, 2	-(Y+Z)%	

5: 2-6-1 (APS/A5 Size Detection)

This determines how the machine behaves if the APS sensors cannot detect the original because it is too small.

0: No - No original detected

1: Yes - A5 assumed

Default: 0: No

6: 2-6-3 (A3 Master 2 Count Up)

0: The counters go up by 1 only.

1: The master counter goes up by 2.

2: The master and print counters both go up by 2.

Default: 0

7: 2-6-4 (Master Eject Attempt Number)

When the master eject mechanism cannot take the master off the drum, the mechanism will try for the number of times set with this SP.

When the master is removed, the mechanism will stop.

Settings: 1 to 3

Default: 1

8: 2-6-5 (Auto Master Save Select)

Auto: If the original is A4 LEF or shorter, the master will be half-sized (A4 for an A3 drum). This decreases master consumption.
Fix A3 size: The master will always be A3 size.

9: 2-6-7 (Ink Supply Timing)

This mode determines when ink is detected and supplied. There are three possible settings.

- '0: After': Ink detection and supply are done when a print job finishes.
- '1: Before': They are done when the Print Start key is pressed (and before starting printing).
- '2: No': Ink is not added except during normal printing.

NOTE: 1. If the machine detects a low ink condition during printing, ink is supplied regardless of this setting.

2. To minimize the wait time for drum idling, ink supply prior to starting printing has been eliminated by setting this mode to '0: After' as the default.

10: 2-6-8 (Ghost Image Removal)

This SP lets the user wrap a blank master around the drum. This should be done if a drum will not be used for a long time. If a normal used master is used, the holes in the master will let the ink become dry. Also, if the drum is removed, people can see the content of the master.

To wrap a blank master around the drum, the user must press the "." button and the Start button together.

11: 2-6-14 (Thermal Head Writing Mode)

If this is set to 'ON', the thermal head writing position is moved a small amount between masters. The amount is set with SP2-6-15 (Thermal Head Writing Position Shift Amount) automatically. This changes the side-to-side margin on the master.

This prevents the same parts of the thermal head from being used all the time, because if masters that contain the same image (such as a logo) are made frequently, this can burn out the thermal head.

Default: OFF

2-6-15 (Thermal Head Swinging Quantity)

Settings: 1 to 5 mm

Default: 2 mm

12: 2-6-16 (Constance Print Pressure Mode)

The print pressure is fixed to the value of SP2-6-17 (Print Pressure In Fixing Mode). Otherwise, the print pressure will be changed by the print speed and the temperature.

Default: OFF (pressure is changed by print speed and temperature)

2-6-17 (Print Pressure In Fixing Mode)

Settings: 0 to 6

Default: 3

13: 2-6-18 (Print Pressure Shift Adjust)

The same amount of print pressure is added to all the print pressure settings (SP 6-54 to 6-58).

NOTE: The maximum pressure is 6, and the minimum pressure is 0. If you input a value that takes the pressure outside this range, it is ignored, and either 6 or 0 will be used.

Settings: -2 to +2
Default: 0

14: 2-6-20 (135rpm Limit)

Paper longer than B4 SEF can cause a paper exit jam. Because of this, the machine cannot use the 6th speed print for paper that is longer than B4SEF.

If this SP is set to 'off', this limitation will be ignored.

CAUTION: When this setting is 'off', a paper exit jam could occur for paper larger than B4SEF after printing out about 600 sheets. Stop the print job when there are about 600 sheets of paper on the paper delivery table.

15: SP 2-6-27, 2-6-28

When there is too much ink in the drum, you must remove the ink. To do this, you must make a blank master, then remove the ink.

1. First, set SP 2-6-27 to ON. This enables the rest of this procedure.
2. Press the “Auto Cycle” button and the Start button together. The machine automatically wraps a master around the drum, applies pressure to transfer the ink into the master (at this time, the drum rotates a set number of times), and removes the master. Then another blank master is wrapped, to prevent the ink in the drum from becoming dry.

During this procedure, the excess ink in the drum transfers to the master. If there is a lot of excess ink, you must make more than one master. SP 2-6-28 sets the number of masters that are made.

After you finish, you can keep SP 2-6-27 on. Then if the problem occurs again, you can instruct the user by phone or mail about how to do the above procedure, and you do not have to go there yourself.

16: 2-10 (Color Ink Detection)

There are 15 possible colors that can be specified with SP 2-10-1 to -4.

Allocation of color codes							
0	**1**	**2**	**3**	**4**	**5**	**6**	**7**
Other	Red	Blue	Green	Brown	Gray	Yellow	Purple
8	**9**	**10**	**11**	**12**	**13**	**14**	
Maroon	Navy	Orange	Teal	Red Base	Blue Base	Yellow Base	

Default: 0 (other)

3. System Settings

No.	Display	No.	Menu	Function	Default	Setting
3-1	Installation Setting	1	Serial Number	Use these to input the serial numbers, etc. Do these at installation if required. The data is used in the data printout mode in the system test. (SP3-1-1 can be seen in SP1-21-1. SP3-1-6 can be seen in SP1-22-1.)	-	
		6	Phone Number - Service			
		7	Phone Number - Supply Order			
		8	Phone Number – Business			
		9	Product Name - Master			
		10	Product Name – Ink			
		11	Date			
		12	Installation Date		-	
		13	First Power On Date		-	
3-2	Unit Setting	1	Set Job Separation		Yes	No/Yes
		2	Set Key Counter		No	No/Yes
		3	Optional Counter Type	Set to Yes if installed.	0	0: None 1: Add.card 2: Sub.crd 3: Prepaid Card 4: Coin Rack
		4	Set Paper Delivery Table	Japan only	No	No/Yes
		5	Set Paper Feed Station		No	No/Yes
		6	Set Sorter	Japan only	No	No/Yes
		7	Set Two-table Delivery Unit	Japan only	No	No/Yes
		10	Double Feed Sensor	Set to ‘No’ if a customer’s paper type causes problems with the double feed sensor.	Yes	No/Yes
		11	LCIT	Set to Yes if installed.	No	No/Yes
		12	LCOT	Set to Yes if installed.	No	No/Yes
		13	Original Back Light	Japan only	No	No/Yes
		14	Anti-Condensation Heater	Japan only	No	No/Yes
3-4	PM Parts Replacement Record	1	Drum Screen	See Note 1.		
		2	Paper Clamper Unit			
		3	Feed Pressure			
		4	Separation Pressure			
		5	Friction Pad A			
		6	Friction Pad B			
		7	Brush Velt.			
		8	Bank Feed Pressure			
		9	Bank Separation Pressure			
		10	Bank Friction Pad			

Notes

1: 3-4 (PM Parts Replacement Record)

After all PM parts are replaced, use the SP for each replaced part and push the 'Replace' button, then push 'Yes'. The date, and the print and master counters at the time of replacement will be stored in the machine.

The parts for which this information can be recorded are:

Cloth screen, Paper clamper, Pick-up roller, Paper feed roller, Friction pad A/B, Feed Encoder Brush Bracket.

NOTE: 1) Make sure to push the 'Replace' button then 'Yes' each time you replace a part. If you do not do this, the information is not recorded correctly.
2) Use this information for checking the endurance of PM parts

4. Input Test Mode

SP No.	Display	No.	Menu
4-1	Scanner Unit	1	Scanner HP Sensor
		2	Platen Size Length Sensor 1
		3	Platen Size Length Sensor 2
		4	Platen Size Width Sensor 1
		5	Platen Size Width Sensor 2
		6	Platen Special Size Sensor Abroad1
		7	Platen Size Sensor Abroad2
		8	Platen Cover Sensor
4-10	Master Making Unit	1	Master Unit Set Switch
		2	Plotter Unit Lock Sensor
		3	Cutter HP SW
		4	Master Set Sensor
		5	Master End Sensor
		6	Master Edge Sensor
		7	Master Duct Sensor
		8	Platen Release Detection
		9	Thermal Head Temperature
		11	Master Amount Sensor
4-20	Master Eject Unit	1	Eject Box Set Switch
		2	Master Eject Sensor
		3	Pressure Plate HP Sensor
		4	Pressure Plate Limit Pos. SN
		5	Eject Box Lock Sensor
4-30	Paper Feed Table	1	Paper Table Lowering Switch
		2	Paper Table Lower Limit Sensor
		3	Paper Table Height Sensor
		4	Paper Table Set Sensor
		5	Paper Amount Sensor 1
		6	Paper Amount Sensor 2
		7	Paper Amount Sensor 3
4-31	Paper Feed Table - Paper	1	Paper End Sensor
		2	Paper Length Sensor
		3	Paper Width Detection 0
		4	Paper Width Detection 1
		5	Paper Width Detection 2
		6	Paper Width Detection 3
		7	Paper Width Detection 4
		8	Paper Width Detection 5
4-40	Paper Pressure	1	Paper Pressure SN 0
		2	Paper Pressure SN 1
		3	Paper Pressure SN 2
		4	Paper Pressure SN 3
4-41	Separation Pressure	1	Separation Pressure SN 0
		2	Separation Pressure SN 1
		3	Separation Pressure SN 2
		4	Separation Pressure SN 3

SP No.	Display	No.	Menu
4-42	Friction Pad	1	1st Friction Pad Position Sensor
		2	2nd Friction Pad Position Sensor
		3	Friction Pad Position - Standard
		4	Friction Pad Position - Special
4-50	Paper Transport	1	Paper Registration Sensor
		2	Paper Feed Timing Sensor
		3	Paper Feed Start Sensor
		4	Feed Start Sensor – Feed Station
		5	Lower Wrapping Jam Sensor
		6	Paper Exit Sensor
		7	Pressure Cylinder Feed Encoder
		8	Wing Guide Sensor Up
		9	Wing Guide Sensor Down
		10	Registration Roller Press SN
		11	Registration Roller Release SN
4-60	Around the Drum	1	1st Drum Position Sensor
		2	2nd Drum Position Sensor
		3	3rd Drum Position Sensor
		4	Drum Type Check 0
		5	Drum Type Check 1
		6	Color Drum ID SN 1
		7	Color Drum ID SN 2
		8	1st Drum Master Sensor
		9	2nd Drum Master Sensor
		10	Clamper Close Position Sensor
		11	Clamper Open Position Sensor
		12	Shift Pressure Cam to A3
		13	Shift Pressure Cam to A4
		14	Printing Pressure HP Sensor
		15	Printing Press Position Sensor
4-61	Image/Drum Shift HP SN	1	Image HP Shift Sensor
		2	Drum HP Shift Sensor
4-62	Ink	1	Ink Pump Sensor
		2	Ink Cartridge Set Switch
		3	Ink Detection
		4	Ink Flow Sensor
		5	Idling Drum Sensor
		6	Ink Temperature
4-80	Other Section	1	Front Door Open Detection
		2	Main Motor Lock Detect
		3	Relay Guide Set Sensor
4-90	Job Separator Unit	1	Upper Limit Sensor
		2	Paper Amount Sensor
		3	Length Limit Sensor
		4	Slide HP sensor
4-100	Document Feeder Unit	1	Installation Detect
		2	Cover Open Sensor

SP No.	Display	No.	Menu
		3	Registration Sensor
		4	Original End Sensor
		5	Original Set Sensor
		6	ADF Size Sensor Length 1
		7	ADF Size Sensor Length 2
		8	ADF Size Sensor Width 1
		9	ADF Size Sensor Width 2
		10	Position Sensor
150	LCIT	1	Paper Table Lifting Switch
		2	Paper Table Lowering Switch
		3	Paper Table Height Sensor
		4	Paper Table Lower Limit Sensor
		5	Upper Cover Release Sensor
		6	Paper Table Upper Limit Sensor
		7	Paper Width Detection 1
		8	Paper Width Detection 2
		9	Paper Width Detection 3
		10	Paper Width Detection 4
		11	Paper Width Detection 5
		12	Paper Width Detection 6
		13	Paper Length Sensor
		14	Paper End Sensor
		15	1st Paper Sensor
		16	2nd Paper Sensor
		17	3rd Paper Sensor
		18	4th Paper Sensor
		19	5th Paper Sensor
		20	6th Paper Sensor
		21	7th Paper Sensor
		22	8th Paper Sensor
160	LCOT	1	Paper Table Lifting Switch
		2	Paper Table Lowering Switch
		3	Paper Table Upper Limit Sensor
		4	Paper Table Lower Limit Sensor
		5	Paper Amount Sensor
		6	End Plate Release Sensor
4-170	Options	1	Key Counter Detection
		2	Key Card Detection
		3	Not used

5. Output Test Mode

SP No.	Display	No.	Menu
5-001	Scanner Unit	1	Xenon Lamp
		2	Move Scanner - Scan
		3	Move Scanner - Return
		4	Move Scanner - HP
5-010	Master Making Unit	1	Master Feed Motor
		2	Platen Release Motor - Forward
		3	Platen Release Motor - Reverse
		4	Master Feed Motor - Forward
		5	Master Feed Motor - Reverse
		6	Cutter Motor to Forward
		7	Cutter Motor - Reverse
		8	Cutter Motor - HP
		9	Master Vacuum Fan 1
		10	Master Vacuum Fan 2
		11	Blower Buffer Fan
		12	Master Duct Entrance Solenoid
		13	Thermal Head ON
		14	Platen Roller Pressure ON
		15	Platen Roller Pressure OFF
		18	Unit Lock Solenoid - Lock
		19	Unit Lock Solenoid - Unlock
5-020	Master Eject Unit	1	Master Eject Motor - Forward
		2	Master Eject Motor - Reverse
		3	Pressure Plate Motor to Limit
		4	Pressure Plate Motor to Eject Pos
		5	Pressure Plate Motor to HP
		8	Eject Box Lock Solenoid ON
		9	Eject Box Lock Solenoid OFF
5-030	Paper Feed Table	1	Paper Table Motor - Up
		2	Paper Table Motor - Down
5-040	Paper Pressure Motor	1	Paper Pressure Motor - Up
		2	Paper Pressure Motor - Down
		3	Paper Pressure Min
		4	Paper Pressure 1
		5	Paper Pressure 2
		6	Paper Pressure 3
		7	Paper Pressure 4
		8	Paper Pressure 5
		9	Paper Pressure Max
5-041	Separation Pressure Motor	1	Motor Up
		2	Motor Down
		3	Eject Position
		4	Separation Pressure Min
		5	Separation Pressure 1
		6	Separation Pressure 2
		7	Separation Pressure 3

SP No.	Display	No.	Menu
		8	Separation Pressure 4
		9	Separation Pressure 5
		10	Separation Pressure Max
5-042	Friction Pad Shift Motor	1	Standard
		2	Special
5-043	Paper Registration Pressure	1	Registration Pressure ON
		2	Registration Pressure OFF
		3	Regist Pressure Motor Forward
		4	Regist Pressure Motor Reverse
5-050	Paper Feed Motor	1	Slowest
		2	30 rpm
		3	1st Speed
		4	2nd Speed
		5	3rd Speed
		6	4th Speed
		7	5th Speed
		8	6th Speed
5-051	Registration Motor	1	Slowest
		2	30 rpm
		3	1st Speed
		4	2nd Speed
		5	3rd Speed
		6	4th Speed
		7	5th Speed
		8	6th Speed
5-052	Paper Delivery	1	Wing Guide Motor - Up
		2	Wing Guide Motor - Down
		3	Air Knife Fan - Side
		4	Air Knife Fan - Center
		5	Transport Vacuum Fan
5-060	Drum Rotation	1	Slowest
		2	1st Speed
		3	2nd Speed
		4	3rd Speed
		5	4th Speed
		6	5th Speed
		7	6th Speed
5-061	Clamper Motor	1	Clamper Motor - Open
		2	Clamper Motor - Close
5-062	Image Shift Motor	1	Image Shift Motor – Left
		2	Image Shift Motor – Right
		3	Drum Shift Motor – Up
		4	Drum Shift Motor - Down
5-063	Drum Idling Roller	1	Drum Idling Roller - ON
		2	Drum Idling Roller - Return
5-064	Around The Drum	1	Ink Pump Motor
		2	Print Press Solenoid

SP No.	Display	No.	Menu
		3	Shift Pressure Cam to A3
		4	Shift Pressure Cam to A4
		5	3rd Drum Position LED - GREEN
		6	3rd Drum Position LED - RED
		7	Printing Pressure 1
		8	Printing Pressure 2
		9	Printing Pressure 3
		10	Printing Pressure 4
		11	Printing Pressure 5
		12	Printing Pressure 6
		13	Printing Pressure 7
		14	Pressure Cam Shift Motor FWD
		15	Pressure Cam Shift Motor REV
5-070	Counter	1	Print Counter Up
		2	Master Counter Up
5-080	Other Sections - Main Body	1	All Indicators On
		2	PSU Fan Motor
		3	Auto Shut Off
5-090	Job Separator Unit	1	Slider Lift Motor - Up
		2	Slider Lift Motor - Down
		3	Job Separator Motor - Forward
		4	Job Separator Motor - Reverse
5-100	Document Feeder Unit	1	Feed Motor
		2	Feed Clutch
		3	Pick-up Solenoid
5-150	LCIT	1	Paper End Solenoid
		2	Paper Length Solenoid
		3	Paper Table Motor Up
		4	Paper Table Motor Down
		5	Paper Feed motor
		6	1st Paper Delivery motor
		7	2nd Paper Delivery motor
		8	3rd Paper Delivery motor
5-160	LCOT	1	Paper Table Motor Up
		2	Paper Table Motor Down
5-170	Options	1	Count-up Key Counter
		2	Count-up Key Card
		4	Not used

6. System Adjustment

No.	Display	No.	Menu	Function	Default	Setting
6-1	Scan & Writing Adjustment	1	Main Scan Position - Platen	Side-to-side registration adjustment; see Note 1.	0	-5.0 to 2.0 mm
		2	Main Scan Position - DF		0	-5.0 to 5.0 mm
		3	Scan Start Position - Platen	Scanning start line adjustment; see Note 2.	0	-2.0 to 5.0 mm
		4	Scan Start Position - DF		0	-5.0 to 5.0 mm
		5	Scanning Speed - Platen	See Note 3.	0	-5.0 to 5.0%
		6	Scanning Speed - DF		0	-5.0 to 5.0%
		7	Master Writing Speed	See Note 4.	0	-5.0 to 5.0%
		8	Master Writing Length	Do not use in the field.	0	-5.0 to 5.0%
		9	Main Master Writing Position		0	-3.0 to 3.0 mm
		10	Trail Edge Margin		0	0 to 2mm
6-2	Master Making Density	1	Letter	See Note 5.	1	0 to 2
		2	Letter/Photo		1	0 to 2
		3	Photo		1	0 to 2
		4	Pencil		1	0 to 2
		5	Tint		1	0 to 2
6-3	Drum Master Clamp	1	Drum Master Clamp Registration	See Note 6.	0	-10 to 10 mm
6-4	Sensor Voltages/ Thresholds	1	Master Eject Sensor	The use of these SP modes is explained in various parts of the Replacement and Adjustment section.	2.5	1.5 to 3.0 V
		2	Master End Sensor		0.8	0.1 to 3.0V
		3	Master Edge Sensor - High		2	1.5 to 3.0 V
		4	Master Set Sensor		2.8	1.5 to 3.0 V
		5	Drum master 1st sensor		2.5	1.5 to 3.0 V
		6	Drum master 2nd sensor		2.5	1.5 to 3.0 V
		7	List of Sensors Adjustment	See Note 7		
6-5	Sensor Board Unit	1	SBU Auto Adjustment	Refer to the Replacements and Adjustments section.	-	
		2	SBU Gain - EVEN	Do not adjust.	-	
		3	SBU Gain - ODD	Do not adjust.	-	
		4	SBU DC Count - EVEN	Do not adjust.	-	
		5	SBU DC Count - ODD	Do not adjust.	-	

No.	Display	No.	Menu	Function	Default	Setting
		6	SBU Reference Count – Value	Do not adjust.	-	
		7	SBU Offset - EVEN	Do not adjust.	-	
		8	SBU Offset - ODD	Do not adjust.	-	
6-6	MTF Filter	1	Letter Mode - Main Scan	See Note 8.	2	0 to 8
		2	Letter Mode - Sub Scan		1	0 to 8
		3	Letter Photo Mode – Main Scan		2	0 to 8
		4	Letter Photo Mode - Sub Scan		1	0 to 8
		7	Photo Mode - Main Scan		2	0 to 8
		8	Photo Mode - Sub Scan		1	0 to 8
		9	Pencil Mode - Main Scan		2	0 to 8
		10	Pencil Mode - Sub Scan		1	0 to 8
		11	Tint Mode - Main Scan		2	0 to 8
		12	Tint Mode - Sub Scan		1	0 to 8
⇒	6-7 Drum Master Length	1	A3 Drum	Adjust if the cut length of the master is not correct.	0	-5 to 5mm
		2	DLT Drum		0	-5 to 5mm
		3	A4 Drum		0	-5 to 5mm
		5	A4 Cut	Adjust A4 Master cut	0	-5 to 5mm
⇒	6-8 Ink Detection Pulse	1	Ink Detection Pulse - ☛ 3.8.7 Ink Detection			
	6-9 Paper Feed Pressure	1	Feed Pressure Std Normal Paper	See Note 9.	3	0 to 6
		2	Normal Paper - Frequently		5	0 to 6
		3	Normal Paper – Very Frequently		6	0 to 6
		4	Feed Pressure Std Thick Paper		4	0 to 6
		5	Thick Paper – Frequently		5	0 to 6
		6	Thick Paper – Very Frequently		6	0 to 6
		7	Feed Pressure Std Thin Paper		1	0 to 6
		8	Thin Paper – Frequently		3	0 to 6
		9	Thin Paper – Very Frequently		5	0 to 6
		10	Feed Pressure Std Special Paper		3	0 to 6
		11	Special Paper- Frequently		4	0 to 6
		12	Special Paper – Very Frequently		5	0 to 6

No.	Display	No.	Menu	Function	Default	Setting
		13	Feed Pressure Std User 1		5	0 to 6
		14	User 1 – Frequently		6	0 to 6
		15	User 1 – Very Frequently		6	0 to 6
		16	Feed Pressure Std User 2		5	0 to 6
		17	User 2 – Frequently		6	0 to 6
		18	User 2 – Very Frequently		6	0 to 6
6-10	Separation Press	1	Sep Pressure Std Normal Paper	See Note 10.	3	0 to 6
		2	Normal Paper – Frequently		5	0 to 6
		3	Normal Paper – Very Frequently		6	0 to 6
		4	Sep Pressure Std Thick Paper		1	0 to 6
		5	Thick Paper - Frequently		2	0 to 6
		6	Thick Paper – Very Frequently		4	0 to 6
		7	Sep Pressure Std Thin Paper		2	0 to 6
		8	Thin Paper - Frequently		4	0 to 6
		9	Thin Paper – Very Frequently		6	0 to 6
		10	Sep Pressure Std Special Paper		1	0 to 6
		11	Special Paper - Frequently		2	0 to 6
		12	Special Paper – Very Frequently		4	0 to 6
		13	Sep Pressure Std User 1		2	0 to 6
		14	User 1 – Frequently		4	0 to 6
		15	User 1 – Very Frequently		6	0 to 6
		16	Sep Pressure Std User 2		2	0 to 6
		17	User 2 - Frequently		4	0 to 6
		18	User 2 – Very Frequently		6	0 to 6
		19	Normal Paper - Low Temp Mode	See Note 11.	ON	On/OFF

No.	Display	No.	Menu	Function	Default	Setting
		20	Thick Paper – Low Temp Mode		ON	On/OFF
6-11	Friction Pad	1	Normal Paper	See Note 12.	Standard	Standard/ Special
		2	Thick Paper		Special	Standard/ Special
		3	Thin Paper		Special	Standard/ Special
		4	Special Paper		Special	Standard/ Special
		5	User1 Paper		Standard	Standard/ Special
		6	User2 Paper		Standard	Standard/ Special
6-12	Paper Clamping	1	Normal Paper	See Note 13.	Yes	Yes/No
		2	Thick Paper		Yes	Yes/No F
		3	Thin Paper		Yes	Yes/No
		4	Special Paper		Yes	Yes/No
		5	User 1 Paper		Yes	Yes/No
		6	User 2 Paper		Yes	Yes/No
6-13	Delivery Wing Angle	1	Normal Paper	See Note 14.	Upper	Lower/Upper
		2	Thick Paper		Lower	Lower/Upper
		3	Thin Paper		Upper	Lower/Upper
		4	Special Paper		Lower	Lower/Upper
		5	User 1 Paper		Upper	Lower/Upper
		6	User 2 Paper		Upper	Lower/Upper
6-14	Paper Feed Delay	1	16 rpm	Do not adjust. (Changes the feed motor on timing after the feed start timing sensor is activated.) See Note 15.	290	0 to 32767
		2	30 rpm		500	0 to 32767
		3	60 rpm		193	0 to 32767
		4	75 rpm		106	0 to 255
		5	90 rpm		48	0 to 255
		6	105 rpm		54	0 to 255
		7	120 rpm		20	0 to 255
		8	135 rpm		1	0 to 255
6-15	Paper Feed Delay - Thick	1	16 rpm	Do not adjust. (Changes the feed motor on timing in thick and special paper modes after the feed start timing sensor is activated.) See Note 15.	370	0 to 32767
		2	30 rpm		580	0 to 32767
		3	60 rpm		273	0 to 32767
		4	75 rpm		186	0 to 255
		5	90 rpm		128	0 to 255
		6	105 rpm		74	0 to 255
		7	120 rpm		40	0 to 255
		8	135 rpm		20	0 to 255
6-16	1st Time Feed Pulse	1	16 rpm	Do not adjust. (Changes the registration motor on timing after the feed start timing sensor is	50	0 to 255
		2	30 rpm		50	0 to 255
		3	60 rpm		50	0 to 255
		4	75 rpm		50	0 to 255
		5	90 rpm		50	0 to 255

No.	Display	No.	Menu	Function	Default	Setting
		6	105 rpm	activated.) See Note 16.	18	0 to 255
		7	120 rpm		18	0 to 255
		8	135 rpm		18	0 to 255
6-17	1st Paper Feed Pulse - Thick	1	16 rpm	Do not adjust. (Changes the registration motor on timing in thick paper mode after the feed start timing sensor is activated.) See Note 16.	0	0 to 255
		2	30 rpm		0	0 to 255
		3	60 rpm		0	0 to 255
		4	75 rpm		0	0 to 255
		5	90 rpm		0	0 to 255
		6	105 rpm		0	0 to 255
		7	120 rpm		0	0 to 255
		8	135 rpm		0	0 to 255
6-18	2nd Time Feed Delay	1	30 rpm	Do not adjust. (Changes the registration motor on timing in special paper mode after the feed start timing sensor is activated.)	630	0 to 32767
		2	60 rpm		333	0 to 32767
		3	75 rpm		267	0 to 32767
		4	90 rpm		208	0 to 32767
		5	105 rpm		160	0 to 255
		6	120 rpm		126	0 to 255
		7	135 rpm		97	0 to 255
6-19	2nd Time Feed Delay - Thick	1	30 rpm	Do not adjust. (Changes the registration motor on timing in special paper mode after the feed start timing sensor is activated.)	630	0 to 32767
		2	60 rpm		333	0 to 32767
		3	75 rpm		267	0 to 32767
		4	90 rpm		208	0 to 32767
		5	105 rpm		160	0 to 255
		6	120 rpm		126	0 to 255
		7	135 rpm		97	0 to 255
6-20	Registra-tion Delay	1	16 rpm	Do not adjust. (Changes the registration motor on timing in thick paper mode after the feed start timing sensor is activated, when the A4 drum is used.) See Note 17.	37	0 to 255
		2	30 rpm		37	0 to 255
		3	60 rpm		34	0 to 255
		4	75 rpm		31	0 to 255
		5	90 rpm		27	0 to 255
		6	105 rpm		22	0 to 255
		7	120 rpm		17	0 to 255
		8	135 rpm		11	0 to 255
6-21	Regist Delay - Thick	1	16 rpm	Do not adjust. (Changes the registration motor on timing (when using the skip feed mode) after the feed start sensor is activated.) See Note 17.	37	0 to 255
		2	30 rpm		37	0 to 255
		3	60 rpm		35	0 to 255
		4	75 rpm		33	0 to 255
		5	90 rpm		28	0 to 255
		6	105 rpm		24	0 to 255
		7	120 rpm		19	0 to 255
		8	135 rpm		12	0 to 255
6-22	Regist Delay - Special	1	16 rpm	Do not adjust. (Changes the registration motor on timing after the feed	37	0 to 255
		2	30 rpm		37	0 to 255
		3	60 rpm		35	0 to 255
		4	75 rpm		33	0 to 255

No.	Display	No.	Menu	Function	Default	Setting
		5	90 rpm	start timing sensor is activated, when the A4 drum is used.) See Note 17.	28	0 to 255
		6	105 rpm		24	0 to 255
		7	120 rpm		18	0 to 255
		8	135 rpm		12	0 to 255
6-23	A4 Regist Delay	1	16 rpm	Do not adjust. See Note 17.	37	0 to 255
		2	30 rpm		37	0 to 255
		3	60 rpm		32	0 to 255
		4	75 rpm		30	0 to 255
		5	90 rpm		26	0 to 255
		6	105 rpm		21	0 to 255
		7	120 rpm		15	0 to 255
		8	135 rpm		9	0 to 255
6-24	A4 Regist Delay - Thick	1	16 rpm	Do not adjust. See Note 17.	37	0 to 255
		2	30 rpm		37	0 to 255
		3	60 rpm		33	0 to 255
		4	75 rpm		31	0 to 255
		5	90 rpm		27	0 to 255
		6	105 rpm		22	0 to 255
		7	120 rpm		18	0 to 255
		8	135 rpm		10	0 to 255
6-25	Skip Regist Delay	1	16 rpm	Do not adjust.	37	0 to 255
		2	30 rpm		37	0 to 255
		3	60 rpm		33	0 to 255
		4	75 rpm		30	0 to 255
		5	90 rpm		26	0 to 255
		6	105 rpm		21	0 to 255
		7	120 rpm		15	0 to 255
		8	135 rpm		9	0 to 255
6-26	A4 Skip Regist Delay	1	16 rpm	Do not adjust.	37	0 to 255
		2	30 rpm		37	0 to 255
		3	60 rpm		32	0 to 255
		4	75 rpm		30	0 to 255
		5	90 rpm		26	0 to 255
		6	105 rpm		21	0 to 255
		7	120 rpm		15	0 to 255
		8	135 rpm		9	0 to 255
6-27	Paper Clamp Timing Pulse	1	16 rpm	See Note 18.	193	0 to 255
		2	30 rpm		193	0 to 255
		3	60 rpm		199	0 to 255
		4	75 rpm		200	0 to 255
		5	90 rpm		200	0 to 255
		6	105 rpm		201	0 to 255
		7	120 rpm		201	0 to 255
		8	135 rpm		201	0 to 255
6-28	Paper	1	16 rpm	See Note 18.	193	0 to 255

No.	Display	No.	Menu	Function	Default	Setting
	Clamp Pulse - Thick	2	30 rpm		193	0 to 255
		3	60 rpm		196	0 to 255
		4	75 rpm		197	0 to 255
		5	90 rpm		198	0 to 255
		6	105 rpm		201	0 to 255
		7	120 rpm		202	0 to 255
		8	135 rpm		203	0 to 255
6-29	P Clamp Pulse-Special	1	16 rpm	See Note 18.	193	0 to 255
		2	30 rpm		193	0 to 255
		3	60 rpm		199	0 to 255
		4	75 rpm		200	0 to 255
		5	90 rpm		200	0 to 255
		6	105 rpm		201	0 to 255
		7	120 rpm		202	0 to 255
		8	135 rpm		203	0 to 255
6-30	Paper Feed Jam Check Pulse	1	Normal Paper	See Note 19.	153	0 to 255
		2	Thick Paper		169	0 to 255
6-31	Paper Clamp Timing	1	Feed Timing Pulse	Do not adjust.	163	0 to 255
		2	Feed Stop Timing Pulse	See Replacements and Adjustments – Paper Feed Length Adjustment for how to use. See Note 20.	21	0 to 255
		3	Feed Stop Timing Pulse - LCIT		13	0 to 255
		4	Print Position 2 Setting	Do not adjust.	103	0 to 255
		5	Print Position 1 Setting	Do not adjust.	140	0 to 255
		6	Print Position 2 Setting - Thick	Do not adjust.	103	0 to 255
		7	Print Position 1 Setting - Thick	Do not adjust.	140	0 to 255
		8	Feed Slow Down Timing	See Note 21.	32	0 to 255
6-32	Paper Clamp Timing-User1	1	Feed Stop Timing Pulse	See Replacements and Adjustments – Paper Feed Length Adjustment for how to use.	21	0 to 255
6-33	Paper Clamp Timing-User2	1	Feed Stop Timing Pulse	See Replacements and Adjustments – Paper Feed Length Adjustment for how to use.	21	0 to 255
6-34	Regist	1	Normal	See Note 22.	Fast	Slow/Fast

No.	Display	No.	Menu	Function	Default	Setting
	Roller Speed	2	Thick		Slow	Slow/Fast
		3	Thin		Fast	Slow/Fast
		4	Special		Slow	Slow/Fast
		5	User 1		Fast	Slow/Fast
		6	User 2		Fast	Slow/Fast
6-54	Print Pressure – Very Low Tempera-ture	1	Trial Print	Adjust the print pressure at very low temperature (less than 15 ºC)	5	0 to 6
		2	16 rpm		0	0 to 6
		3	30 rpm		5	0 to 6
		4	1st Speed		3	0 to 6
		5	2nd Speed		4	0 to 6
		6	3rd Speed		5	0 to 6
		7	4th Speed		6	0 to 6
		8	5th Speed		6	0 to 6
		9	6th Speed		6	0 to 6
6-55	Print Pressure - Low Tempera-ture	1	Trial Print	Adjust the print pressure at low temperature (15 ~ 19 ºC)	3	0 to 6
		2	16 rpm		0	0 to 6
		3	30 rpm		0	0 to 6
		4	1st Speed		1	0 to 6
		5	2nd Speed		3	0 to 6
		6	3rd Speed		4	0 to 6
		7	4th Speed		5	0 to 6
		8	5th Speed		5	0 to 6
		9	6th Speed		6	0 to 6
6-56	Print Pressure - Normal Tempera-ture	1	Trial Print	Adjust the print pressure at normal temperature (19 ~ 25 ºC)	1	0 to 6
		2	16 rpm		0	0 to 6
		3	30 rpm		0	0 to 6
		4	1st Speed		1	0 to 6
		5	2nd Speed		2	0 to 6
		6	3rd Speed		3	0 to 6
		7	4th Speed		3	0 to 6
		8	5th Speed		4	0 to 6
		9	6th Speed		5	0 to 6
6-57	Print Pressure - High Tempera-ture	1	Trial Print	Adjust the print pressure at high temperature (25 ~ 29 ºC)	1	0 to 6
		2	16 rpm		0	0 to 6
		3	30 rpm		0	0 to 6
		4	1st Speed		1	0 to 6
		5	2nd Speed		1	0 to 6
		6	3rd Speed		2	0 to 6
		7	4th Speed		3	0 to 6
		8	5th Speed		4	0 to 6
		9	6th Speed		4	0 to 6
6-58	Print Pressure –	1	Trial Print	Adjust the print pressure at very high	1	0 to 6
		2	16 rpm		0	0 to 6

No.	Display	No.	Menu	Function	Default	Setting
	Very High Tempera-ture	3	30 rpm	temperature (more than 29 ºC)	0	0 to 6
		4	1st Speed		0	0 to 6
		5	2nd Speed		0	0 to 6
		6	3rd Speed		1	0 to 6
		7	4th Speed		2	0 to 6
		8	5th Speed		3	0 to 6
		9	6th Speed		3	0 to 6
6-59	Filter Correction	1	Letter	See Note 23.	1	0 to 3
		2	Letter/Photo		2	0 to 3
		3	Photo		3	0 to 3
		4	Pencil		1	0 to 3
		5	Tint		2	0 to 3

Notes

1: 6-1-1 and -2 (Main scan position)

Inputting a positive number moves the image away from the operation panel side of the machine. Use the point (**.**) key to switch between + and –.

2: 6-1-3 and -4 (Scan start position)

Inputting a positive number moves the image away from the leading edge of the printer paper. Use the point (**.**) key to switch between + and –.

3: 6-1-5 and -6 (Scanning speed)

Inputting a positive value stretches the image on the master. Inputting a negative value shrinks it. Use the point (**.**) key to switch between + and –.

Procedure:

Put a scale on the exposure glass and make a copy of it. Measure the image of the scale on the output.

Use the following formula to calculate the necessary adjustment to this SP.

[(Length of the scale – Length of the image of the scale) / Length of the scale] x 100 = x.x%

CAUTION: Normally, do not use this SP mode to adjust the vertical magnification. Use it only if the vertical magnification is not satisfactory by adjusting Master Writing Speed (SP6-1-7).

Acceptable settings: -5.0% to 5.0%

Default: 0

4: 6-1-7 (Master writing speed)

This changes the master feed motor speed.

Inputting a positive value stretches the image on the master. Inputting a negative value shrinks it. Use the point (**.**) key to switch between + and –.

CAUTION: Adjust this SP mode before adjusting the Scanning Speed (SP6-1-5/6).

Procedure:

Enter SP8-5-1 (TH Test Patterns) and print pattern number 6.

On the printout, measure the distance of 10 intervals in the sub-scan direction, as

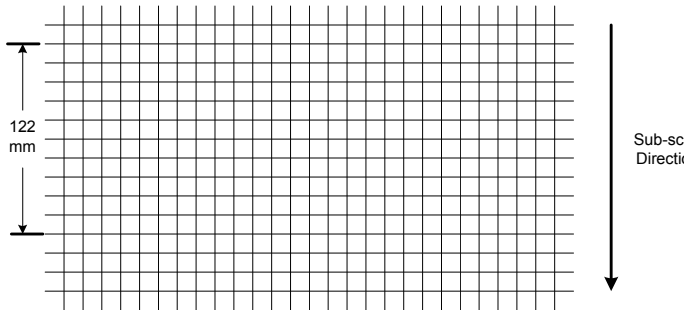

shown in the diagram.

The distance should be 122 mm. If it is not 122 mm, calculate the necessary adjustment with the following formula.

[(122 – measured value) / 122] x 100 = x.x%

Acceptable settings: -5.0% to 5.0%

Default: 0

5: 6-2 (Master making density)

0: Pale, 1: Normal, 2: Dark

The default is 1: Normal. Changing this moves the user's image density settings up or down one notch.

Density	-2	-1	0	1	2	3
0	Pale	Normal	Little Dark	Dark		
1		Pale	Normal	Little Dark	Dark	
2			Pale	Normal	Little Dark	Dark

6: 6-3-1 (Drum master clamper registration)

This determines how far after the leading edge the master is clamped.

A larger value clamps the master further away from the leading edge, and moves the image closer to the leading edge of the paper.

Do not use this SP to adjust leading edge registration. Use SP6-1-3 and -4 for that.

7: 6-4-7 (List of Sensor Adjustments)

A list of the following sensor adjustments is displayed.

- Master End Sensor (ROLL)
- Master Eject Sensor (EJCT)
- Master Edge Sensor (TOP)
- Master Set Sensor (SET)
- 1st Drum Master Sensor (MST1)
- 2nd Drum Master Sensor (MST2)

The voltage output from the sensors is shown in the top line of the display. You can use the + and – buttons on the right side of the display to adjust the boundary conditions for On or Off on the bottom line of the display.

When you are checking the master edge sensor, you must push the Start key to open the master buffer duct entrance plate. The duct plate will stay open for 30 seconds, then it will close automatically. If you want to close the plate before 30 seconds, press the Start key again. When the plate is open, 'TOP' will be shown on the display as white-on-black.

8: 6-6 (MTF filters)

A stronger filter leads to a sharper image, but moiré can become more apparent.

Refer to the following table for the relationship between this SP mode value and filter strength (the relationship is not linear).

Value	Strength of Filter
8	X 4
7	X 2
6	X 1
5	X 1/2
4	X 1/4
3	X 1/8
2	X 1/16
1	X 1/32
0	0

NOTE: This setting is effective only if SP6-59 (filter corrections) is set to “MTF filters”

9: 6-9 (Misfeed – Paper Feed Pressure)

These SP modes determine the paper feed pressures that are automatically applied during paper feed. The feed pressure used by the machine is controlled by the following items:

- The paper type selected by the user (normal, thick, thin, special, user 1, user 2),
- The frequency at which non-feeds are occurring (this estimate can be input by the user).

0: Lowest feed pressure

6: Strongest feed pressure

10: 6-10 (Double Feed – Separation Press)

These SP modes determine the paper separation pressures that are automatically applied during paper feed.

The separation pressure used by the machine is controlled by the following items:

- The paper type selected by the user (normal, thick, thin, special, user 1, user 2),
- The frequency at which double-feeds are occurring (this estimate can be input by the user).

0: Lowest separation pressure

6: Strongest separation pressure

11: 6-10-19, -20 (Low Temperature Mode – Normal/Thick Paper)

If temperature is 19 ºC or lower (measured by the drum thermistor), the separation pressure is increased by 1 automatically for all settings. The maximum pressure is 6.

12: 6-11 (Friction pad)

The machine switches the friction pads depending on the paper type selected by the user (standard, special, thick, user 1, user 2).

13: 6-12 (Paper clamping)

The machine clamps the paper or does not clamp it, depending on the paper type selected by the user (standard, thick, thin, special, user 1, user 2).

The settings for user 1 and user 2 depend on the type of paper that the user has set these up for.

14: 6-13 (Paper delivery table wing angle)

The machine lifts or lowers the wings depending on the paper type selected by the user (standard, thick, thin, special, user 1, user 2).

The settings for user 1 and user 2 depend on the type of paper that the user has set these up for.

15: 6-14~6-15 (1st Paper Feed Delay – Normal/Thick)

The timing for starting the paper feed motor can be adjusted. There is a separate adjustment for each print speed.

It is controlled based on the start timing, after the first actuator on the rear of the pressure cylinder turns on the feed start sensor.

CAUTION: Do not use this adjustment, unless you are instructed by your service manager.

16: 6-16~6-17 (1st Paper Feed Pulse - Normal/Thick)

To improve the separation of paper, the paper feed roller is made to turn more slowly. There is a separate adjustment for each print speed.

CAUTION: Do not use this adjustment, unless you are instructed by your service manager.

17: 6-20~6-24 (Registration Roller Delay)

The timing for starting the registration motor can be adjusted. There is a separate adjustment for each print speed.

It is controlled based on the registration roller start timing, after the second actuator on the pressure cylinder turns on the feed start sensor.

CAUTION: Do not use this adjustment, unless you are instructed by your service manager.

18: 6-27~6-29 (Paper Clamp Timing Pulse)

The amount of paper feed into the paper clamper can be adjusted with this SP mode. Adjust this when there is damage to the leading edge, and upper and lower paper wrapping. There are separate adjustments for different paper types and print speeds.

Adjustment:

To decrease the amount of paper bending, increase the value of the SP.

To increase the amount of paper bending, decrease the value of the SP.

19: 6-30 (Paper Feed Jam Check Pulse)

This SP mode adjusts the amount of time from starting the paper feed roller until jam detection. If the time is long, paper misfeed is improved; but paper cannot be fed if it is too long.

CAUTION: Do not use this adjustment, unless you are instructed by your service manager.

20: 6-31-2 (Feed Stop Timing Pulse)

The amount of paper buckle at the registration roller can be adjusted.

The amount of paper buckle increases by 0.3 mm if you increase the setting by 1.

CAUTION: Adjust this SP mode before adjusting the Feed Slow Down Timing (SP6-31-8).

21: 6-31-8 (Feed Slow Down Timing)

This adjusts the time that the machine starts to decrease the paper speed to adjust the paper buckle at the registration roller.

CAUTION: Normally, do not use this SP mode to adjust the amount of paper buckle at the registration roller. Use it only if the amount of paper buckle is not satisfactory after adjustment to Feed Stop Timing Pulse (SP6-31-2).

22: 6-34 (Registration Roller Speed)

For accurate paper registration, the machine lowers the registration roller rotation speed depending on the paper type selected by the user (standard, special, thick, user 1, user 2). Usually, the 'high' speed setting (3% higher than the low) results in better registration. However, when thick paper is used, it should be lowered because thick paper strongly pushes the paper clamper. This causes friction to the smooth rotation of the pressure cylinder due to play in the cylinder's drive transmission.

23: 6-59 (Filter Corrections)

The filter that is chosen depends on the original type that was selected at the operation panel.

The standard settings are as follows:

- MTF: Letter mode and Pencil mode
- Adaptation: Letter/Photo mode and Pale mode
- Smoothing: Photo mode

Number	Filter
0	-
1	MTF
2	Adaptation
3	Smoothing

7. Memory Data Clear

SP No.	Display	No.	Menu
7-1	Memory Clear	1	Factory Setting
		2	User Custom Setting
		3	User Program Setting
		4	Reset Sales Change Flags
7-2	Counter Clear	1	Total Print
		2	Paper Jam/Error Logging
		3	Master Jam/Error Logging
7-3	Code Clear	1	User Code
		2	Key Operator Code
		3	Security Code Clear
7-4	Reset Paper Feed Systems	1	Feed Pressure
		2	Separation Pressure
		3	Friction Pad Settings
		4	Wing Guide Angle
		5	Feed Control Data
		6	Feed Control Pulse
7-5	Reset Image Adjustment	1	MTF Filter Settings
7-7	HDD Formatting	1	All Area

SP 7-3-3: This is the password that the user must input to disable high security mode temporarily. You can also disable high security mode temporarily with SP 8-7-3.

8. System Test

SP No.	Display	No.	Menu	Setting
8-1	Data Printout	1	All Job Log	-
		2	User Code Counters Only	-
		3	SC & Jam	-
		4	Jam/Error Details	-
		5	User Item	-
		6	Part Exchange History	-
		7	User - System	-
		8	User: Other	-
		9	User Class	-
		10	Basic Setting Printout	-
		11	Input Test Item Printout	-
		12	Output Test Item Printout	-
		13	All System Adjustment	-
		14	Paper Feed Adjustment	-
		15	Option Adjustment Print	-
8-2	Download Program	1	Controller	-
		2	Engine (SD Card)	-
		3	Engine (SD Card)	-
		4	Panel	-
		5	Language	-
		6	PostScript	-
8-5	TH Test Patterns	1	TH Test Patterns	1:Grid 2:Vertical 3:Horiz grey 4:Vert grey 5:16 greys 6:Cross 7:Diag grid 8:256 greys 9:64 greys
8-6	Free Run - Scanner/ADF	1	Scanner Free Run/Magnify	50 to 200%
		2	ADF Free Run/Magnify	50 to 200%
8-7	Other Tests	1	APS Sensor Check Mode	-
		2	Not Used	
		3	Temporary Security OFF	On/OFF

9. Printer Controller

SP No.	Display	No.	Menu	Setting
9-1	Test Mode	1	Output Data Print	Normal/HexDump/ SD card
		2	Service Summary Print	-
		3	NIB Summary Print	-
9-2	Clear Mode	1	Clear Printer Settings	-
		2	NIB NVRAM	-

Notes

1: 9-1-1 (Output Data Print)

In normal operation, an image that is sent from the computer is printed out. But with this SP mode, the image is changed to hex data and then output on paper or to an SD card.

There are three settings:

0: Normal (Default setting)

1: HexDump

2: SD card

HexDump

The image is changed to hex data, and the hex data is printed out on paper.

CAUTION: 1) This mode continues until main power is shut off.
2) In some cases, there will be a large quantity of data, and many masters will be consumed to print out the hex dump. Be careful when you use this mode.

SD card

The image is changed to hex data, and the hex data is transferred to an SD card on the ACU board.
Procedure:

1. Turn off the main switch.
2. Set the SD card.
3. Turn on the main switch.
4. Set SP9-1-1 to “SD card” and get out from the SP mode.
5. Send the data from a computer.
   The ‘data in’ LED on the machine blinks during the data transfer, and the LED turns off when the data transfer is finished (the transfer takes a few seconds).
6. Set SP9-1-1 to “Normal”.
7. Turn on the main switch
8. Remove the SD card from the machine.

CAUTION: Do not take out the SD card before you turn off the main switch and set the SP mode to “Normal”.

5.5 FIRMWARE UPDATE

5.5.1 OVERVIEW

This machine uses SD cards as the media for new firmware.

There are five kinds of firmware for this machine

ACU - Controls the machine, through other boards

ECU - Controls the engine functions, both directly and through other boards.

PS3 - For PostScript 3

NOTE: There are 2 files in this firmware module

Operation Panel - Controls the operation panel.

Language – Firmware for the wording on the operation panel.

NOTE: PS3 has separate files in one firmware module. ACU, ECU, Panel and Language have one file for each firmware module.

5.5.2 PREPARING TO DOWNLOAD FIRMWARE

NOTE: This explanation is based on the C262; therefore, for the C265, use a folder name of 'C265' instead of 'C262'.

1. Make a folder called "romdata" on the SD card (this step is only necessary when the SD card is used for the first time).
2. Make a folder called "C262" inside the "romdata" folder (this step is not necessary if this C262 folder already exists).

Folder Name		File Name	Remarks
Data Type	Product Code		
SD card			
romdata			
	C262		
	ACU	C2620000A_1.00_sd.bin	ACU: 1 file
		C2620000B_1.01_sd.bin	Can store different versions
	ECU	C2621111A_1.00_sd.bin	ECU: 1 file
		C2621111B_1.01_sd.bin	Can store different versions
	PS3	C6402222_A-1.sd.bin	PS3: 2 files
		C6402222_A-2sd.bin	Cannot store different versions
	Panel	C2623333A_1.00_sd.bin	Panel: 1 file
		C2623333B_1.01_sd.bin	Can store different versions
	Language	C2624444A_1.00_sd.bin	Language: 1 file
		C2624444B_1.01_sd.bin	Can store different versions
	BXXX		Can share with other products
		BXXX1111.fwu	
		BXXX2222.fwu	

NOTE:
1) The SD card can be shared with other files (firmware for other duplicators, MFPs, etc.).
2) Format of the file name
   ACU, ECU, Panel, Language:
   C262****X_#_sd.bin
   PostScript
   C640****_#-1_sd.bin
   C640****_#-2_sd.bin

   ****: Part number, X: suffix, #: Version No.
3) Transfer the firmware files into the "C262" folder

NOTE: 1) **For ACU, ECU, Panel and Language**
If different versions of the firmware are stored on the SD card, the machine displays all versions of the firmware on the operation panel. Then, you can upgrade or downgrade by selecting the necessary firmware.
2) The firmware should always be in the “C262” folder (Second level) - “romdata” folder (First Level). If not, the machine cannot find the firmware.
3) Put C262 firmware in the “C262” folder.

4. Wait until the data is transferred completely.

CAUTION: Do not remove the SD card from the PC until after all data is transferred (at this time, the PC says that it is safe to remove the card).

5. Compare the size of the file on the PC and the file on the SD card. If the sizes are different, the data was not transferred completely.

CAUTION: Do not take out the SD card until after you turn off the PC or disconnect the USB Reader/Writer.

5.5.3 DOWNLOADING THE FIRMWARE TO THE MACHINE

1. Turn off the power

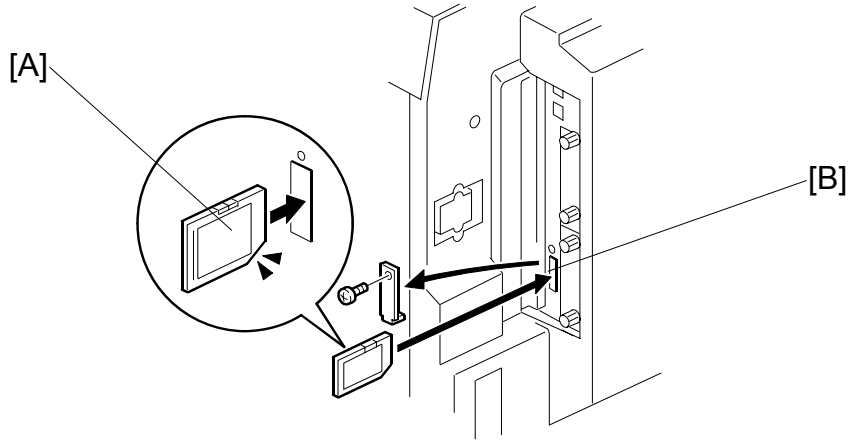

2. Put the SD card [A] in slot [B] of the ACU board.
3. Turn on the power again

4. Enter the SP mode (SP8-2 Download Program).

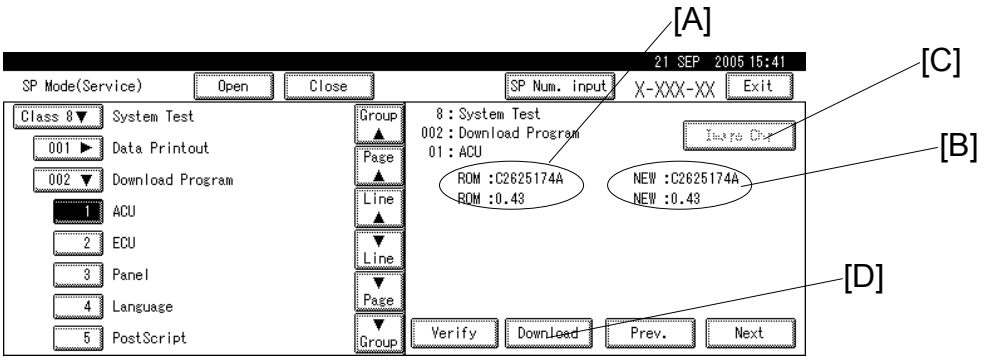

- ACU: SP8-2-1 Controller
  On the left (indicated by ROM) [A], you can see the firmware version that is now in the machine. On the right (indicated by NEW) [B], you can see the firmware version on the SD card.
  More than one version can be stored on the card. Use the Image Chg button [C] to select the version that you want to download.
  After selecting, push the 'Download' [D] button to start downloading.

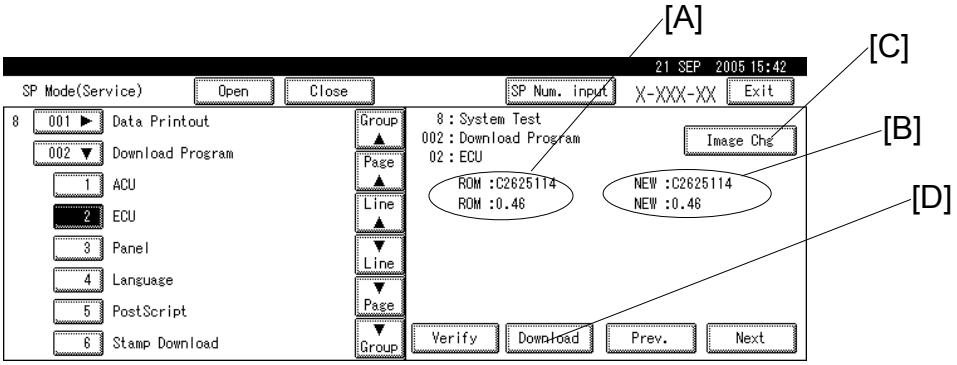

- ECU: SP8-2-2 Engine
  On the left (indicated by ROM) [A], you can see the firmware version that is now in the machine. On the right (indicated by NEW) [B], you can see the firmware version on the SD card.
  More than one version can be stored on the card. Use the Image Chg button [C] to select the version that you want to download.
  After selecting, push the 'Download' [D] button to start downloading.

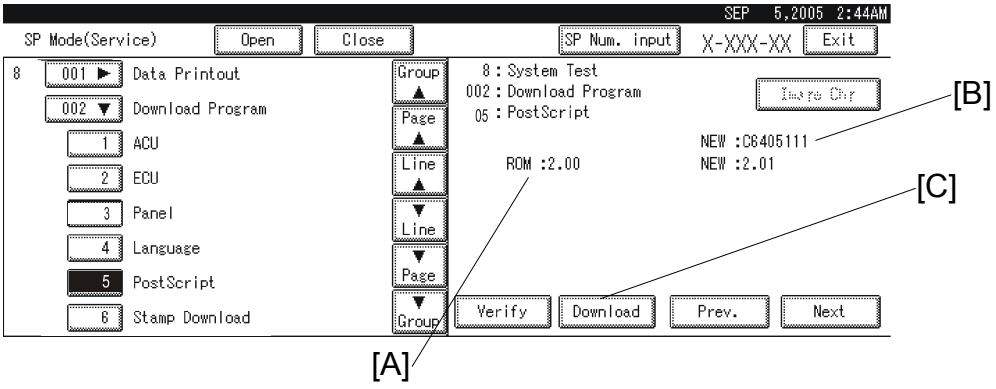

- PS3: SP8-2-6
  On the left (indicated by ROM) [A], you can see the firmware version that is now in the machine. On the right (indicated by NEW) [B], you can see the firmware version on the SD card.
  Only one version can be displayed on the operation panel.
  Push the ‘Download’ button [C] to start downloading.

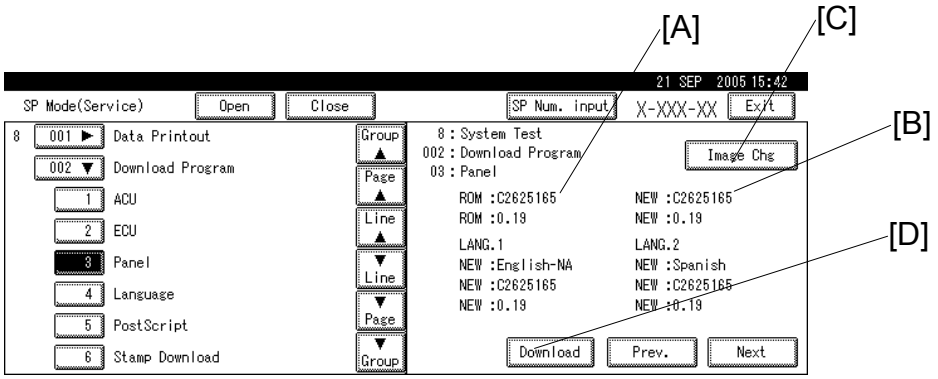

- Panel: SP8-2-3
  On the left (indicated by ROM) [A], you can see the firmware version that is now in the machine. On the right (indicated by NEW) [B], you can see the firmware version on the SD card.
  More than one version can be stored on the card. Use the Image Chg button [C] to select the version that you want to download.
  After selecting, push the ‘Download’ [D] button to start downloading.

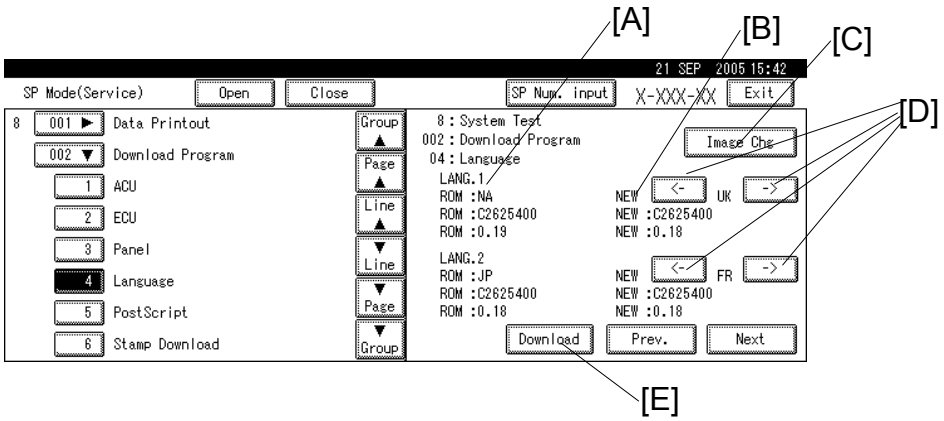

- Language: SP8-2-4
  The machine can have two languages (LANG1, LANG2).
  On the left (indicated by ROM) [A], you can see the firmware versions that are now in the machine. On the right (indicated by NEW) [B], you can see the firmware versions on the SD card.
  More than one version can be stored on the card. Use the Image Chg button [C] to select the version that you want to download.
  Then, use the arrow buttons [D] to scroll through the possible languages. If you do not wish to change one of the two language firmware modules in the machine, select 'NON' with the arrow keys.
  After selecting, push the 'Download' [E] button to start downloading.

The approximate downloading times are:

- ACU: 10 minutes
- ECU: 4 minutes 30 seconds
- PS3: 15 minutes (Maximum 30 minutes)
- Panel: 3 minutes 30 seconds
- Language: 1 minute

5. Shut down the main switch after one of these things occurs.
   - ACU, ECU, PS3: The operation panel changes from "Loading" to "done"

   NOTE: The number of * signs [A] increases during the downloading.

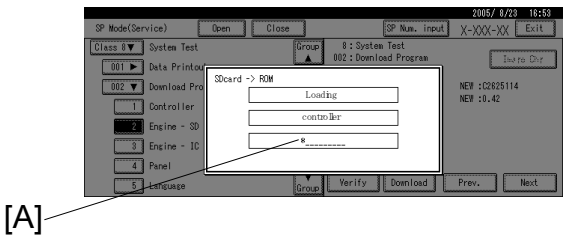

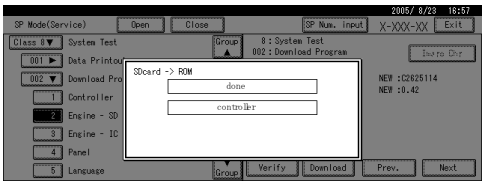

- Panel, language: The green LED on the Start button changes from blinking to Lighting.

NOTE: For Panel and Language firmware, the operation panel will not display the status during the download; therefore, check the start button to check the status of the download.

NOTE: 1) If the downloading did not finish correctly:
- ACU, ECU, PS3: An error message will be shown on the operation panel.
- Panel, Language: Does not change from blinking to Lighting.

2) If an error occurred during the download, do the download again when the display panel shows the SP mode screen. If this is not possible, the related board, and possibly the ACU must be replaced.
- ACU: Replace the ACU board.
- ECU: Replace the ECU board.
- PS3: Replace the PS3 unit.
- Panel: Replace the operation panel.
- Language: Replace the operation panel.

6. Take out the SD card if you finished downloading all modules. Or, if you need to download another firmware module, start from step 1 again.

NOTE: 1) Do not insert or extract the SD card when the machine power is on.
2) Do not shut off the power when the firmware is downloading.

5.5.4 ERRORS DURING FIRMWARE UPDATE

If an error occurs during a download, an error message will be shown in the first line. The error code consists of the letter “E” and a number (“E20”, for example).

Error Message Table

NO.	MEANING	SOLUTION
20	Cannot map logical address	Make sure the SD card is installed correctly, or use a different SD card.
21	Cannot access memory	HDD connection not correct, or replace the hard disk.
22	Cannot decompress compressed data	The ROM data on the SD card is not correct, or data is damaged.
23	Error occurred when ROM update program started	Controller program defective. If the second attempt fails, replace the ACU board.
24	SD card access error	Make sure the SD card is installed correctly, or use a different SD card.
31	Data incorrect for continuous download	Install the SD card with the remaining data necessary for the download, then re-start the procedure.
32	Data incorrect after download interrupted	Do the recovery procedure for the module, then repeat the installation procedure.
33	Incorrect SD card version	The firmware on the SD card is not correct, or data is damaged.
34	Module mismatch - Correct module is not on the SD card	The data on the SD card is not correct. Get the correct data (Japan, Overseas, OEM, etc.) then install again.
35	Module mismatch – Module on SD card is not for this machine	SD update data is not correct. The data on the SD card is for a different machine. Get the correct data then install again.
36	Cannot write module – Cause other than E34, E35	SD update data is not correct. The data on the SD card is for a different machine. Get the correct data then install again.
40	Engine module download failed	Replace the data for the module on the SD card and try again, or replace the ECU board.
42	Operation panel module download failed	Replace the data for the module on the SD card and try again, or replace the operation panel.
44	Controller module download failed	Replace the data for the module on the SD card and try again, or replace the ACU board. The write-protect switch on the SD card is ON. Turn it off.
45	PS module download failed	Replace the data for the module on the SD card. Replace the ACU. Replace the PS module

5.6 SP MODE SETTINGS AFTER REPLACING AN NVRAM

5.6.1 NVRAM FOR THE ACU

When the NVRAM for the ACU is replaced, the following data will disappear:

- Machine code, Serial number, option setting, optional counter

After you replace the NVRAM, do the following SP modes:

1. SP7-1-1 Memory Clear - Factory setting: Clears the setting so that the electrical counter will reset and start to count. The electrical counter will not count unless you do this procedure.
2. 2-4-1 Machine Code Setting: When the machine code is set, the destination, language, and so on will be set automatically, so that all the settings do not have to be set individually.
3. 3-1-1 Serial Number: Set the machine's serial number.

5.6.2 NVRAM FOR THE ECU

When the NVRAM for the ECU is replaced, the settings that were made at the factory for this machine will disappear. (These settings are written on the sheet of paper under the front cover.)

Set all the SP modes according to the sheet of paper under the front cover.

DETAILED SECTION DESCRIPTIONS

6. DETAILED SECTION DESCRIPTIONS

6.1 MECHANISM OVERVIEW

6.1.1 MAJOR PARTS

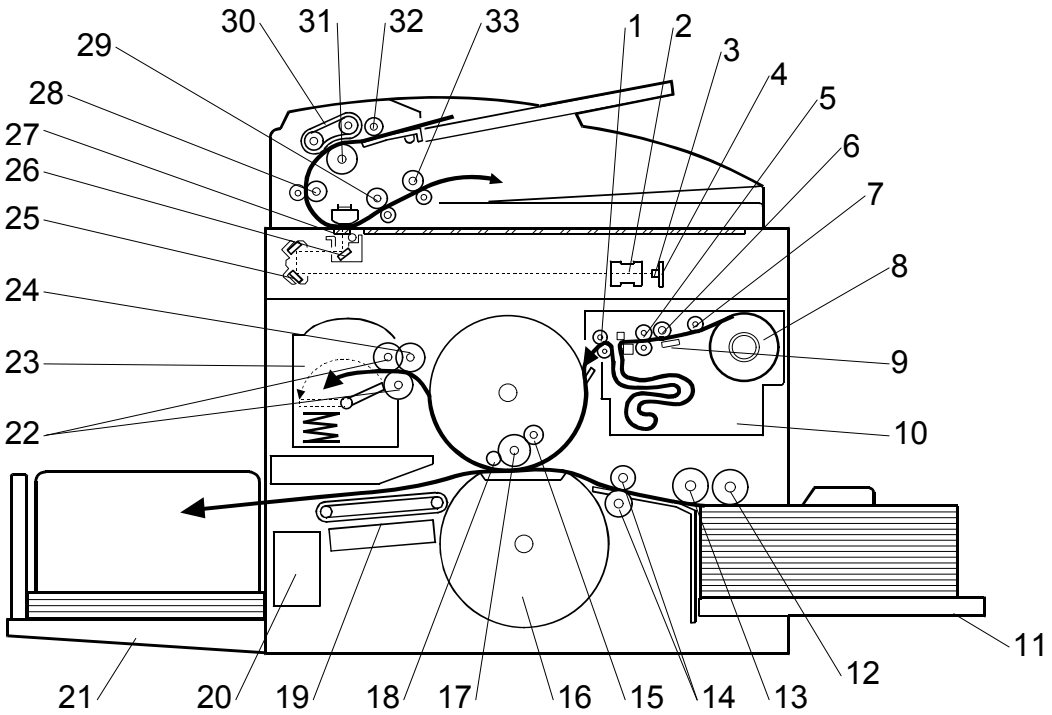

1. Master Feed Control Roller
2. Lens
3. CCD
4. SBU
5. Tension Roller
6. Platen Roller
7. Master Set Roller
8. Master Roll
9. Thermal Head
10. Master Buffer Duct
11. Paper Table
12. Paper Pick-up Roller
13. Paper Feed Roller
14. Registration Rollers
15. Doctor Roller
16. Pressure Cylinder
17. Ink Roller
18. Idling Roller
19. Transport Belts
20. Job Separator Unit
21. Paper Delivery Table
22. Master Eject Rollers
23. Master Eject Box
24. Master Pick-up Roller
25. 2nd Scanner
26. 1st Scanner
27. DF Exposure Glass
28. 1st Transport Roller
29. 2nd Transport Roller
30. Original Feed Belt
31. Separation Roller
32. Pick-up Roller
33. Original Exit Roller

6.1.2 ELECTRICAL COMPONENT LAYOUT

Printed circuit board layout

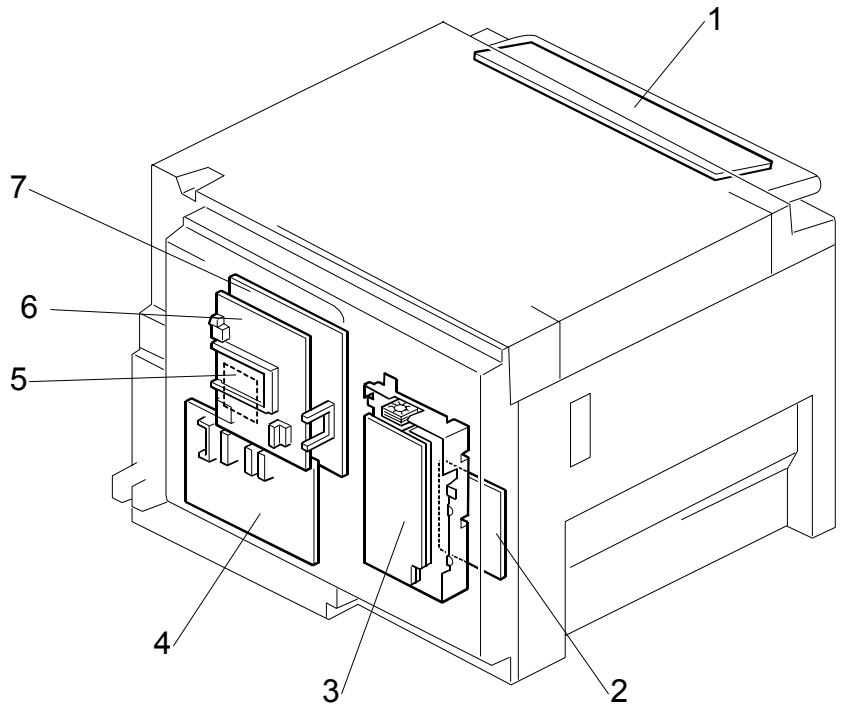

Scanner Section

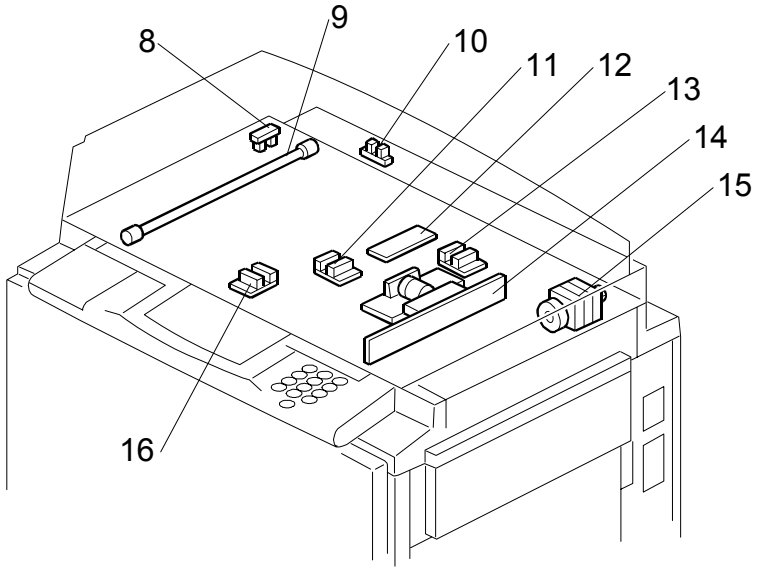

Paper Feed Section

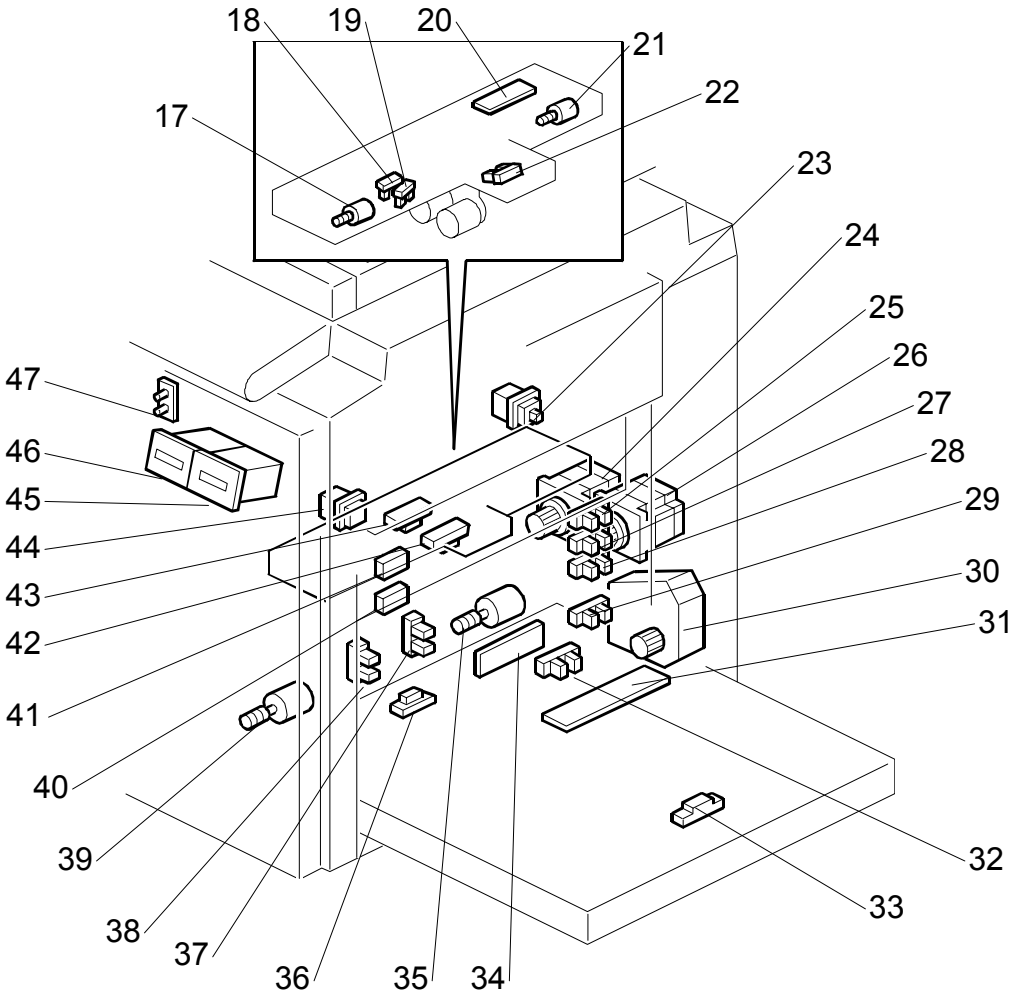

Drum Unit

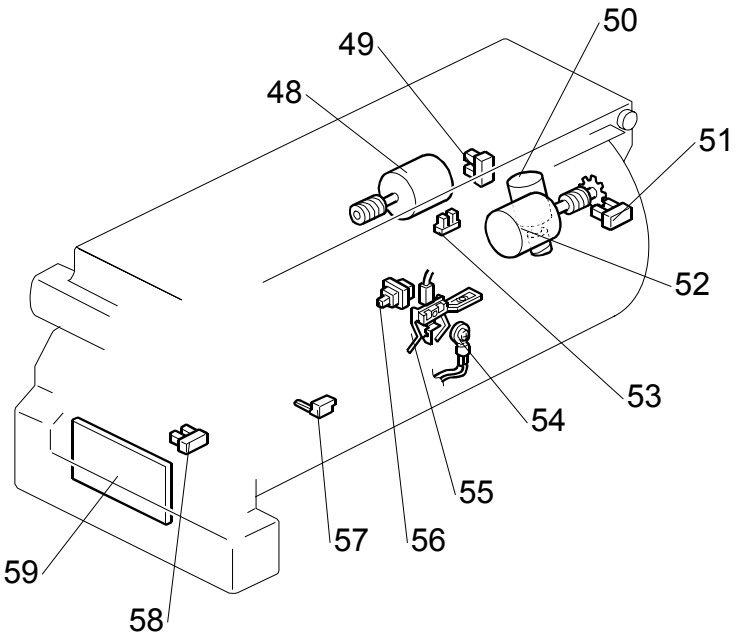

Master Eject, Pressure Cylinder, and Other Sections

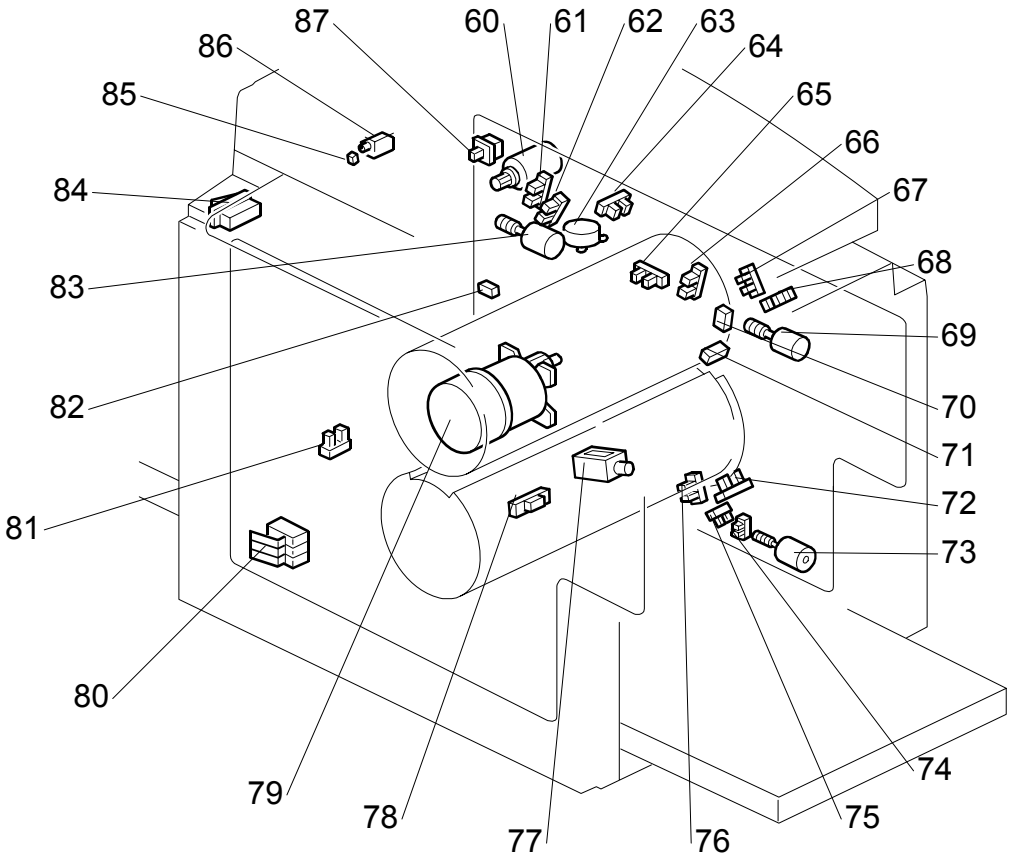

Paper Delivery Section

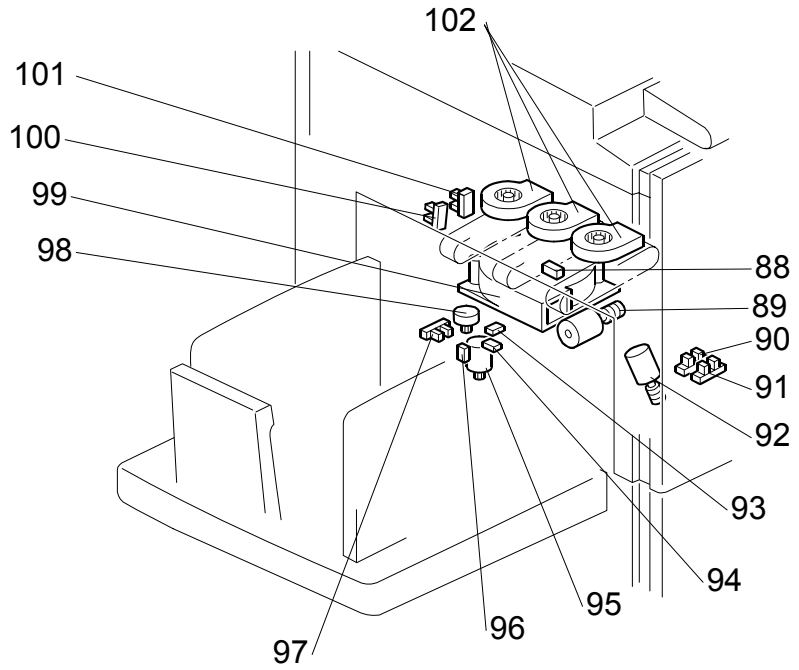

Master Making Unit

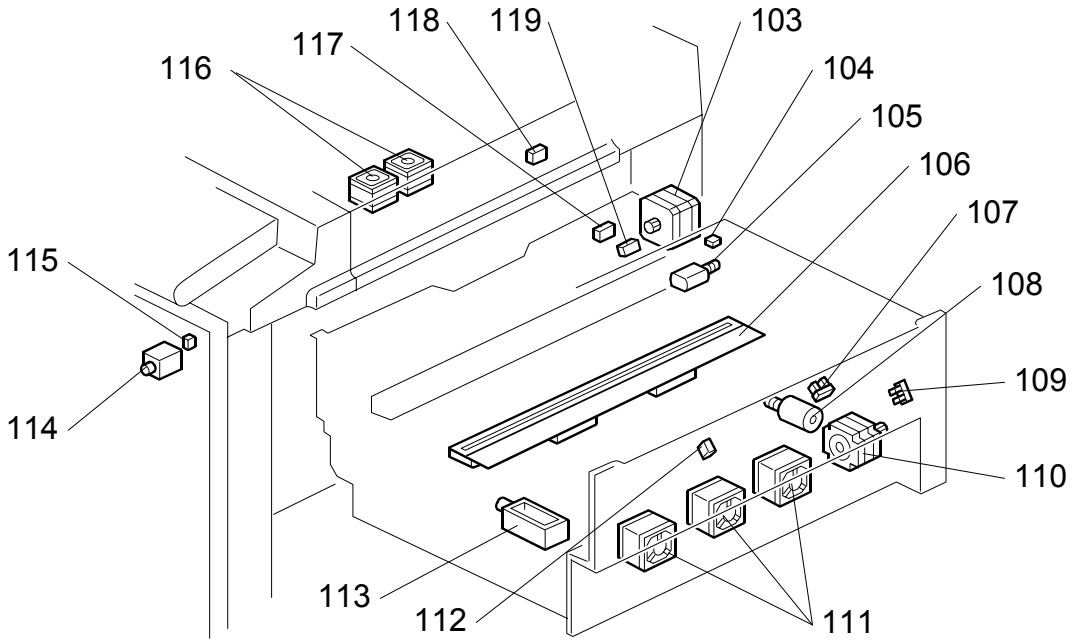

6.1.3 TABLE OF ELECTRICAL COMPONENTS

Boards

Index No.	Name	Function
1	Operation Panel Board	Controls the operation panel.
2	Main Motor Control Board	Controls the main motor speed.
3	Power Supply Unit (PSU)	Provides DC power to the machine.
4	I/O Board	Controls the mechanical components.
5	Double Feed Detection Board	Detects double feeds
6	Application Control Unit (ACU)	This is the main control board for the machine.
7	Engine Control Unit (ECU)	Controls the engine functions, both directly and through other boards.
12	Lamp Stabilizer	This supplies power to the exposure lamp.
14	CCD and SBU	Makes a video signal from the scanned original.
20	Feed Pressure Detection Board	Sends data about the paper feed pressure to the CPU.
31	Paper Width Detection Board	Sends data about the paper width on the paper table to the CPU.
34	Separation Pressure Detection Board	Sends data about the paper separation pressure to the CPU.
59	Ink Detection Board	Checks if there is ink in the drum.

Motors

Index No.	Name	Function
15	Scanner Drive Motor	Drives the scanner.
17	Registration Pressure Motor	Releases the pressure between the registration rollers, to allow jammed paper to be removed easily.
21	Feed Pressure Motor	Drives the paper feed pressure adjustment mechanism.
24	Registration Motor	Feeds the paper to align it with the image on the master on the drum.
26	Paper Feed Motor	Feeds the paper from the paper table.
30	Paper Table Motor	Raises and lowers the paper table.
35	Separation Pressure Motor	Drives the paper separation pressure adjustment mechanism.
39	Friction Pad Shift Motor	Switches between the normal pad and custom pad (these pads are used for paper separation).
48	Ink Pump Motor	Drives the ink pump to supply ink.
50	Idling Roller Motor	Presses or releases the idling roller against the drum metal screen.
52	Drum Shift Motor	Slides the drum metal screen position to the front or rear for the side-to-side image shifting mode.
60	Master Eject Motor	Sends used masters into the master eject box.

Index No.	Name	Function
63	Image Shift Motor	Makes a phase difference between the positions of the drum and pressure cylinder for the up/down image shifting mode.
69	Clamper Motor	Opens or closes the drum master clamper.
73	Printing Pressure Adjustment Motor	Adjusts the printing pressure to the correct value for the current temperature and speed of printing. This is done to prevent changes in image density.
79	Main Motor	Drives the drum, pressure cylinder, and paper delivery unit components.
83	Pressure Plate Motor	Raises and lowers the pressure plate in the master eject box.
89	Wing Guide Motor	Changes the position of the paper wing guides in the paper delivery unit.
92	Pressure Cam Shift Motor	Switches the cams for the small master and full size master to apply the appropriate printing pressure.
95	Slider Lift Motor	Moves the sliding arm in the job separator unit up or down.
98	Job Separator Motor	Drives the sliding arm in the job separator unit.
99	Transport Vacuum Fan	Provides suction so that paper is held firmly on the transport belts.
102	Air Knife Fans	Three fans provide air to separate the paper leading edge from the drum.
103	Master Feed Control Motor	Controls the master feed control roller operation to feed the master.
105	Cutter Motor	Cuts the master after completing the master making.
108	Platen Release Motor	Applies or releases the pressure between the platen roller and the thermal head.
110	Master Feed Motor	Feeds the master to the drum.
111	Master Suction Fans	Three fans provide suction to guide the master into the buffer duct.
116	Master Buffer Fans	Two fans make sure that the folds of the master do not stick together in the master buffer duct.

Switches

Index No.	Name	Function
23	Master Making Unit Set Switch	Checks if the master making unit is set.
44	Paper Table Lowering Switch	Lowers the paper table.
56	Ink Cartridge Set Switch	Detects if the ink cartridge is in place.
80	Cover Safety Switch	Checks if the front door is set correctly.
84	Main Switch	Turns the power on or off.
87	Eject Box Set Switch	Checks if the master eject box is installed.
104	Cutter HP Switch	Detects when the cutter is at the home position.

Sensors

Index No.	Name	Function
8	Scanner HP Sensor	Detects when the scanner is at home position.
10	Platen Cover Sensor	Detects if the platen cover is open or closed.
11	Original Length Sensor 1, 2	Detect the length of the original on the exposure glass.
13	Original Special Size Sensor 1, 2	
16	Original Width Sensor 1, 2	Detects the width of the original on the exposure glass.
18	Registration Roller Press Sensor	Detects when the registration roller is in the correct position for paper feed.
19	Registration Roller Release Sensor	Detects when the registration roller is in the correct position for jam removal.
22	Paper Height Sensor	Detects if the top of the paper stack on the paper table is at the paper feed height.
25	Remaining Paper Sensor 1	Detects the amount of paper remaining on the paper table.
27	Remaining Paper Sensor 2	Detects the amount of paper remaining on the paper table.
28	Remaining Paper Sensor 3	Detects the amount of paper remaining on the paper table.
29	Paper Table Lower Limit Sensor	Detects when the paper table is at its lower limit position.
32	Paper Table Set Sensor	Detects if the paper table is closed.
33	Paper Length Sensor	Detects when long paper is on the paper table.
36	Paper End Sensor	Detects when the paper table runs out of paper.
37	Friction Pad Position Sensor 1	Checks the position of the friction pad (used for paper separation).
38	Friction Pad Position Sensor 2	Checks the position of the friction pad (used for paper separation).
40	Double Feed Sensor - Receiver	Detects paper double-feeds.
41	Double Feed Sensor - Emitter	Detects paper double-feeds.
42	Paper Registration Sensor	Detects paper approaching the registration roller.
43	Paper Feed Timing Sensor	Detects paper approaching the paper clamper in the pressure cylinder.
49	Drum Shift HP Sensor	Detects when the drum screen is at the home position (the side-to-side image shift is 0).
51	Drum Shift Sensor	Sends the image positions data to the CPU for display on the operation panel.
53	Ink Pump Sensor	Monitors the operation of the ink pump to count how many cycles it has moved.
57	Ink Flow Sensor	Detects when the ink level is too high. This is a backup for the ink detection pins, to prevent ink flooding inside the drum.
58	Idling Roller HP Sensor	Detects when the idling roller is at the home position.

Index No.	Name	Function
61	Pressure Plate HP Sensor	Detects when the pressure plate is at the home position.
62	Pressure Plate Limit Position Sensor	Detects when the pressure plate is at the lowest position.
64	Image Shift HP Sensor	Detects if the pressure cylinder is at the home position (The up/down image shift is 0).
65	2nd Drum Position Sensor	Checks the drum position.
66	1st Drum Position Sensor	Checks the drum position.
67	Clamper Close Position Sensor	Detects when the clamper is in the closed position.
68	Clamper Open Position Sensor	Detects when the clamper is in the open position.
70	2nd Drum Master Sensor	Detects if there is a master on the drum, to detect master clamping errors.
71	1st Drum Master Sensor	Detects if there is a master on the drum when the Start Key is pressed.
72	Feed Encoder	Detects fluctuations in the pressure cylinder rotation.
74	Printing Pressure HP Sensor	Detects when the printing pressure mechanism is at the home position (this is pressure level 2).
75	Printing Pressure Position Sensor	Detects the printing pressure level when the printing pressure mechanism is at a different position from the home position (level 2)
76	Feed Start Sensor	Checks the pressure cylinder position for the paper feed start timing.
78	Lower Wrapping Jam Sensor	Detects paper wrapping jams on the pressure cylinder.
81	Drum Home Position Sensor	The green LED at the front of the machine lights when this sensor turns on.
82	Master Eject Sensor	Detects master eject misfeeds.
85	Eject Box Lock Sensor	Detects the status of the master eject box lock mechanism.
88	Paper Exit Sensor	Detects paper misfeeds at the exit.
90	A3 Cam Sensor	Detects when the A3 printing pressure cam is used.
91	A4 Cam Sensor	Detects when the A4 printing pressure cam is used.
93	Slider Position Sensor	Detects when the job separator slider is fully moved towards the paper in the delivery table.
94	Slider HP Sensor	Detects when the job separator slider is at the home position.
96	Paper Sensor	Detects when the job separator slider touches the paper on the delivery table.
97	Slide Upper Limit Sensor	Detects when the job separator slider is at the uppermost position.
100	Wing Upper Position Sensor	Detects when the paper wing guides are in the upper position.
101	Wing Lower Position Sensor	Detects when the paper wing guides are in the lower position.

Index No.	Name	Function
107	Platen Release Sensor	Detects when the platen pressure is applied against the thermal head.
109	Master Amount Sensor	Detects the speed of rotation of the master roll, to determine the length of master that remains on the roll.
112	Master Duct Sensor	Detects when a master remains in the master buffer duct.
115	Master Making Unit Lock Sensor	Detects the status of the master making unit lock mechanism.
117	Master Edge Sensor	Detects the leading edge of the master when a new master roll in installed.
118	Master End Sensor	Detects when the master runs out.
119	Master Set Sensor	Detects whether a master roll is present.

Solenoids

Index No.	Name	Function
77	Printing Pressure Release Solenoid	There are two solenoids: one at the front and one at the rear. They pull the release arms to apply the printing pressure against the drum.
86	Master Eject Box Lock Solenoid	Locks the master eject box, so that old masters cannot be removed. This security feature can be cancelled only by the machine's administrator.
113	Duct Entrance Solenoid	Opens or close the plate at the entrance of the master buffer duct.
114	Master Making Unit Lock Solenoid	Locks the master making unit in position during printing, so that the user cannot accidentally remove it at the incorrect time.

Others

Index No.	Name	Function
9	Exposure Lamp (Xenon Lamp)	Applies lights to the original for exposure.
45	Print Counters	Keeps track of the total number of copies.
46	Master Counters	Keeps track of the total number of masters made.
47	Drum Home Position Indicator (LEDs)	LEDs that indicates the drum position.
54	Thermistor	Detects the temperature inside the drum to adjust various processes.
55	Ink Detection Pin	Detects if ink is present in the drum.
106	Thermal Head	Burns the image of the original onto the master.

6.1.4 DRIVE LAYOUT

Overview

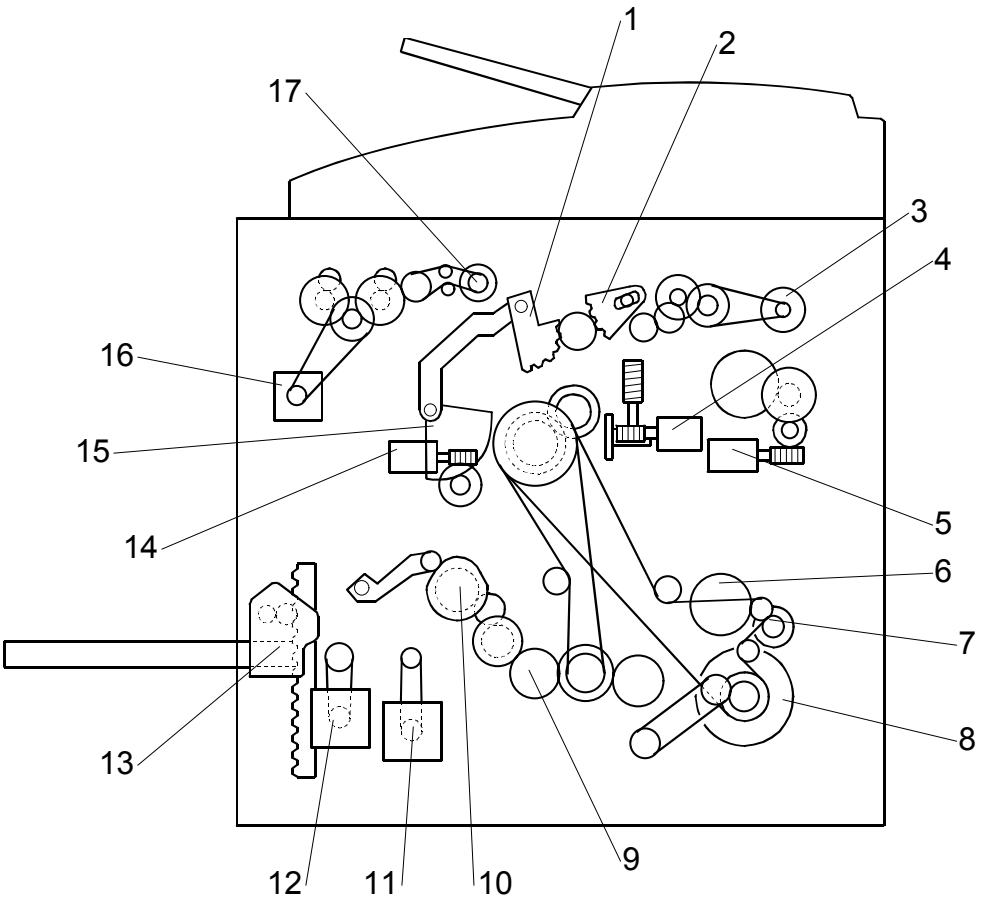

1. Clamper Opening Arm Sector Gear (For the master eject position)
2. Master Pick-up Roller Sector Gear
3. Master Eject Motor
4. Image Shift Motor
5. Pressure Plate Motor
6. Exit Pawl Drive Cam Gear
7. Paper Delivery Unit Drive Gear/Pulley
8. Main Motor
9. Pressure Cylinder Drive Gear (Including the Scissors Gear)
10. Registration Roller Lifting Cam Drive Gear
11. Registration Motor
12. Paper Feed Motor
13. Paper Table Motor
14. Clamper Motor
15. Drum Guide
16. Master Feed Motor
17. Master Feed Control Motor

Main Drive

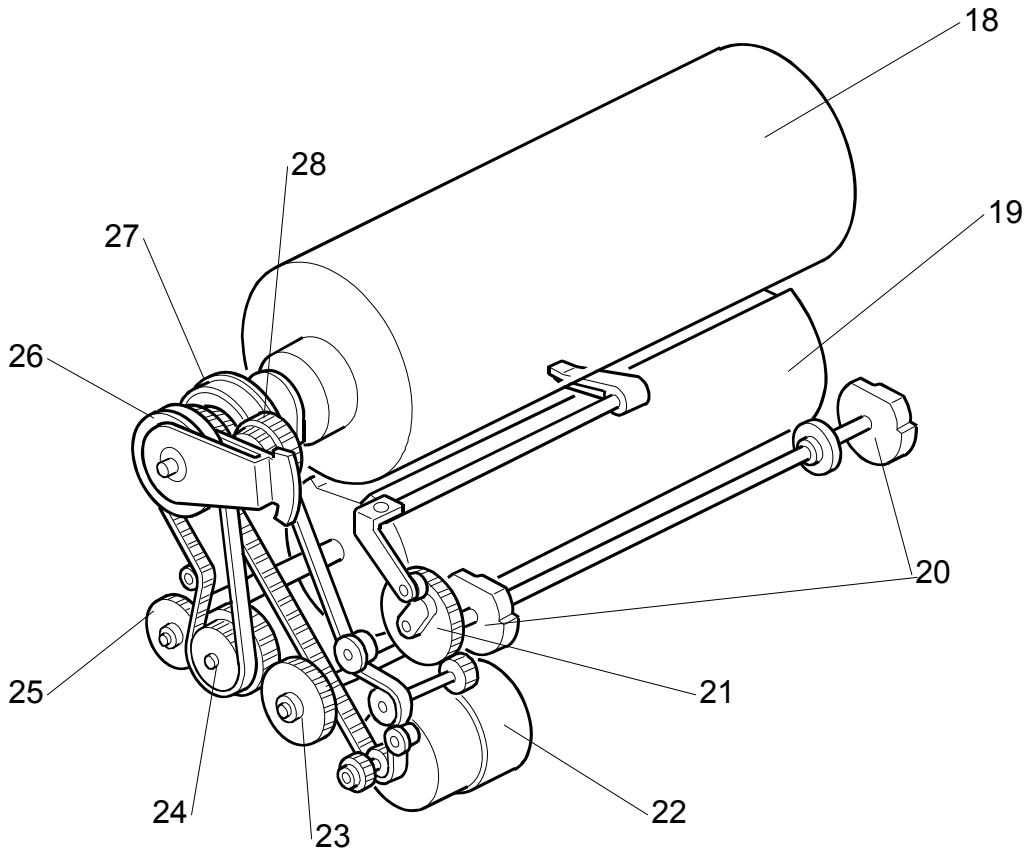

18. Drum
19. Pressure Cylinder
20. Printing Pressure Cam
21. Exit Pawl Drive Cam Gear
22. Main Motor
23. Printing Pressure Cam Drive Gear
24. Idler Gear/Pulley
25. Pressure Cylinder Drive Gear (Including the Scissors Gear)
26. Primary Gear/Pulley
27. Drum Drive Gear/Pulley
28. Image Shift Gear

6.2 SCANNER AND OPTICS

6.2.1 OVERVIEW

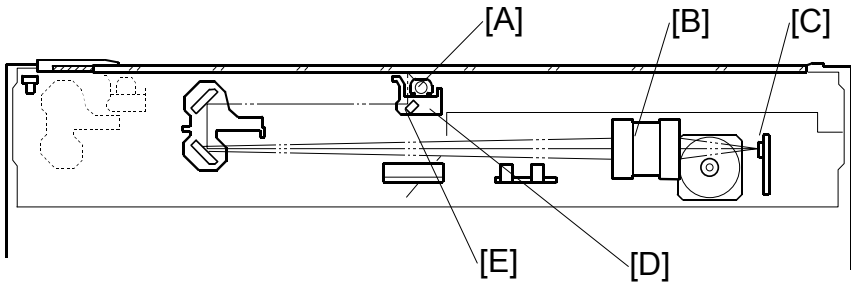

The original is illuminated by the exposure lamp (a xenon lamp in this model) [A]. The image is reflected onto a CCD (charge coupled device) [C] via the 1st, 2nd, 3rd mirrors, and lens [B].

The 1st scanner [D] consists of the exposure lamp, and the 1st mirror [E].

A lamp stabilizer energizes the exposure lamp. The light reflected by the reflector is of almost equal intensity, to reduce shadows on pasted originals.

6.2.2 SCANNER DRIVE

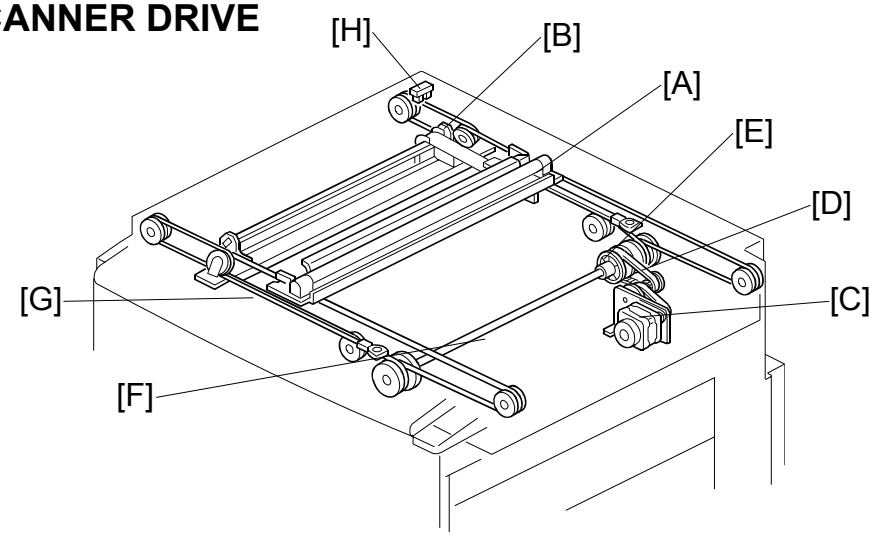

A stepper motor drives the scanner. The 1st and 2nd scanners [A, B] are driven by the scanner drive motor [C] through the timing belt [D], scanner drive pulley [E], scanner drive shaft [F], and two scanner wires [G].

- Book mode -

In full size mode, the 1st scanner speed is 42.33 mm/s during scanning. The 2nd scanner speed is half that of the 1st scanner.

In reduction or enlargement mode, the scanning speed depends on the magnification ratio. The returning speed is always the same, in both full size and magnification modes. Changing the scanner drive motor speed changes the image length in the sub-scan direction. Image processing on the ECU board accomplishes reduction and enlargement in the main scan direction.

SP6-1-5 changes the motor speed and therefore adjusts the magnification ratio in the sub-scan direction.

- ADF mode -

During scanning, the scanners are always in their home positions (when the scanner H.P sensor [H] detects the 1st scanner). The ADF motor feeds the original through the ADF. In reduction/enlargement mode, changing the ADF motor speed changes the image length in the sub-scan direction. Magnification in the main scan direction is done on the ECU board, in the same manner as book mode.

SP6-1-6 changes the ADF motor speed and therefore adjusts the magnification ratio in the sub-scan direction.

6.2.3 ORIGINAL SIZE DETECTION IN PLATEN MODE

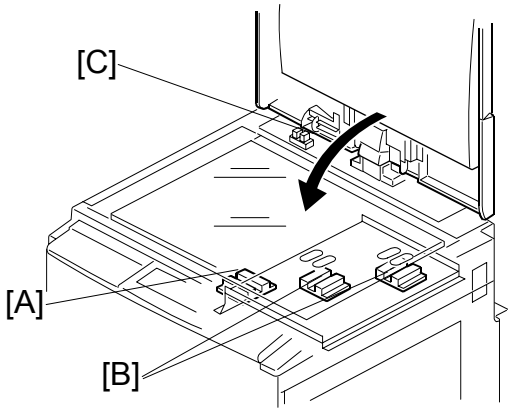

The two width sensors [A] and four length sensors [B] are reflective photosensors. These sensors detect the size of the original.

The size is detected at these times:

- Immediately after the platen cover sensor [C] detects that the cover was just closed
- When the start key is pushed while the platen cover sensor is open.

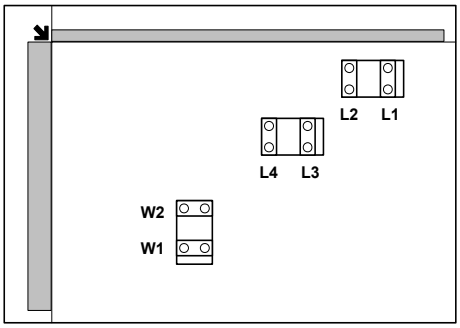

The platen cover sensor or the DF position sensor in the optional ADF informs the main CPU of the original size when the platen is about 15 cm above the exposure glass. At this time, only the sensors located underneath the original receive the reflected light and switch on. The other sensors remain off. The main CPU can recognize the original size from the number of activated sensors.

Original Size		Length Sensors				Width Sensors	
A4/A3 version	**LT/DLT version**	**L1**	**L2**	**L3**	**L4**	**W1**	**W2**
A3	11" x 17"	O	O	O	O	O	O
B4	10" x 14"	O	O	O	O	O	X
F4	81/2" x 14" (8" x 13")	O	O	O	X	X	X
A4—L	81/2" x 11"	O	O	X	X	X	X
B5—L	-	O	X	X	X	X	X
A4—S	11" x 81/2"	X	X	X	X	O	O
B5—S	-	X	X	X	X	O	X

NOTE: O: On (Paper Present), X: Off

The above table shows the sensor output for each original size. A message will appear in the operation panel display for other combinations.

6.2.4 AUTO BACKGROUND CORRECTION

For the platen cover

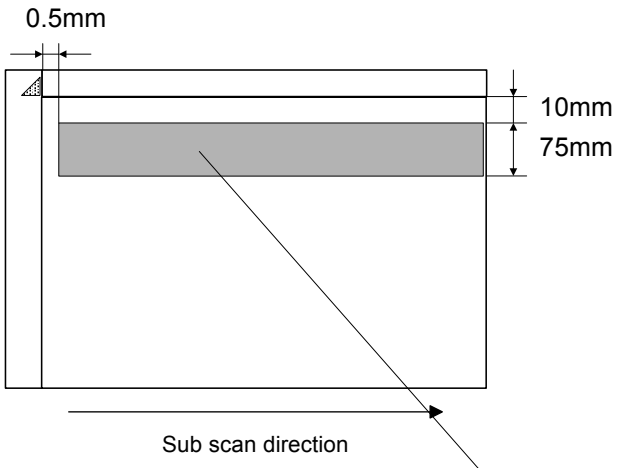

For the ADF

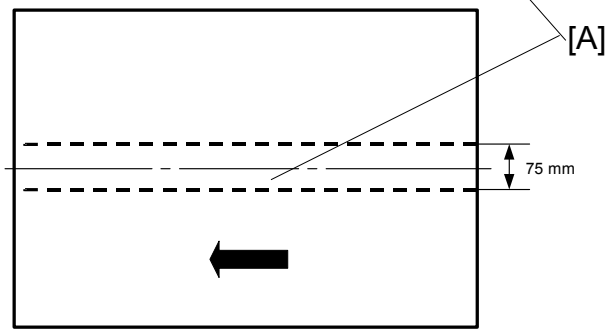

Auto background correction mode can be used in Photo/Letter, Photo, and Pale modes. The default setting does not allow the user to select auto background correction mode. Use a user tool to enable this mode (Master Making/Print Settings – Original Setting – Background Correction).

Auto background correction prevents the background of an original from appearing on copies.

While scanning the original, the background density detection area [A] is also scanned. This area [A] is a narrow strip at the start of the main scan line, as shown. As the scanner scans down the page, the ECU board detects the peak white level for each scan line, within this narrow strip only. From this peak white level, the ECU board determines the reference value for the A/D conversion for the scan line. The ECU board then sends the reference value to the reference controller on the SBU.

When an original with a gray background is scanned, the density of the gray area is the peak white level density. Therefore, the original background will not appear on copies. This feature corrects any changes in background density down the page, because peak level data is taken for each line scanned.

6.3 IMAGE PROCESSING

6.3.1 OVERVIEW

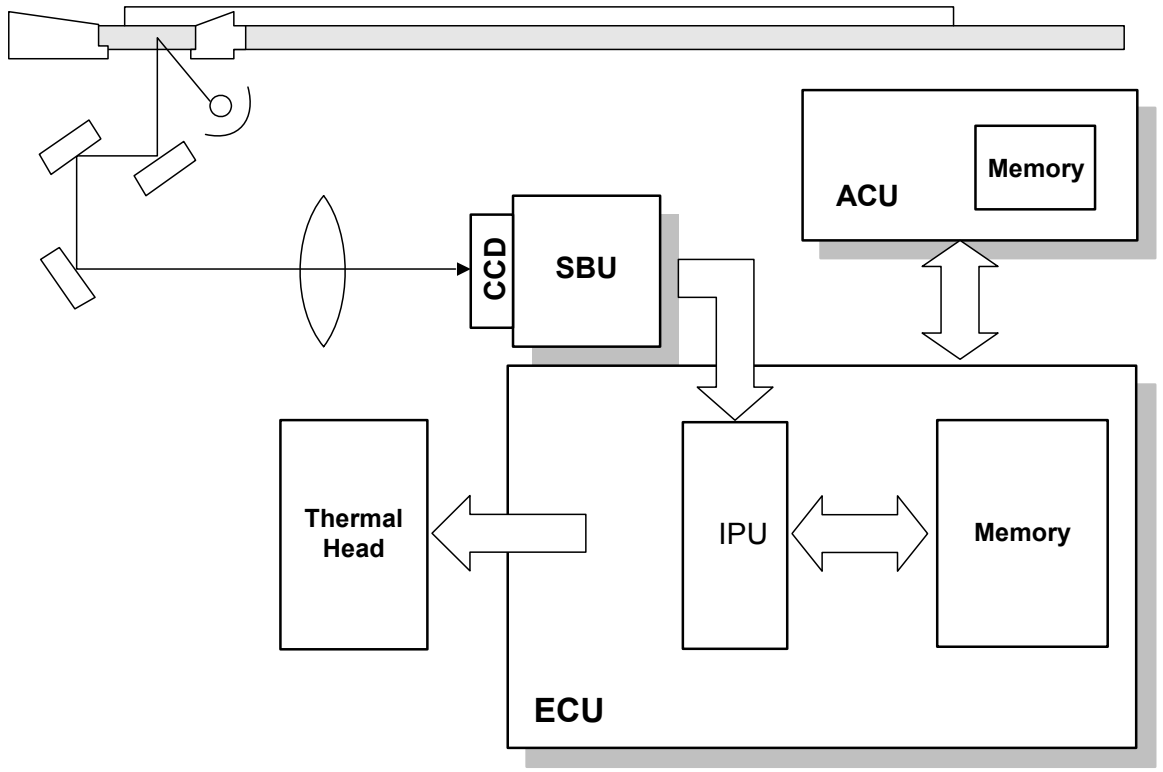

The CCD converts the light reflected from the original into an analog signal. The CCD line has 7,450 pixels and the resolution is 600 dpi (23.6 lines/mm).

After the above process, the A/D converter built into the SBU transforms the analog signals into 8-bit signals. This assigns a value to each pixel from a scale of 256 grades. Then, the digitized image data goes to the ECU board.

The image data then goes to the ECU board, which carries out the following processes on the image data:

1. Auto shading
2. Filtering (MTF, Adaptation Filter and smoothing)
3. Main scan Magnification/Reduction
4. Centering
5. Binary processing
6. Erase Shadow
7. Memory functions

6.3.2 AUTO SHADING

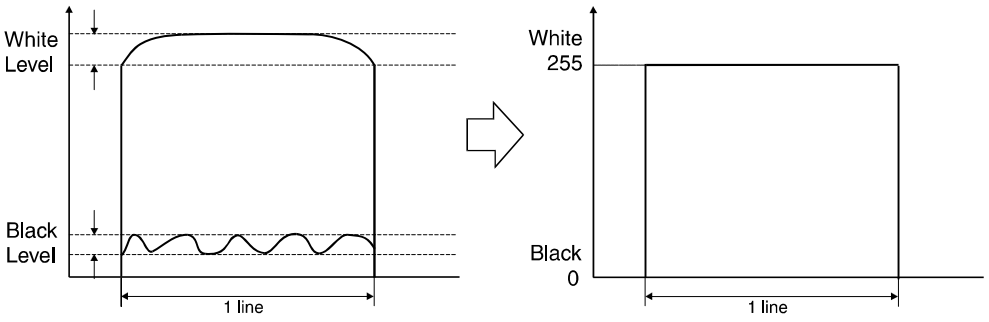

There are two auto shading methods: black level and white level correction. Auto shading corrects errors in the signal level for each pixel.

- Black Level Correction -

The CPU reads the black dummy data from one end of the CCD signal (64 pixels are blackened at the end) and takes an average of the black dummy data. Then, the CPU deletes the black level value of each image pixel.

- White Level Correction -

Before scanning the original, the machine reads a reference waveform from the white plate. The average of the white video level for each pixel is stored as the white shading data in the FIFO memory in the ECU board.

The video signal information for each pixel obtained during image scanning is corrected by the ECU board.

Auto shading for the first original is done before the scanning.

After scanning every page, auto shading is done to prepare for the next page.

If the copy image density or the original mode is changed during the copy run, the auto shading for the next scan is done before the scanning to respond to the mode change.

6.3.3 FILTERING

Types of Filters

- MTF Filter
- Adaptation Filter
- Smoothing Filter

Filters for each Original Type

The type of filter that is used depends on the original type.

- Letter mode: MTF Filter
- Letter/Photo mode: Adaptation Filter
- Photo mode: Smoothing Filter
- Pencil mode: MTF Filter
- Pale mode: Adaptation Filter

NOTE: The filters that are used for each mode can be changed. Please refer to SP6-59-1~5 for details.

Features of the filters

MTF Filter:

- When the filter is stronger in the main scan direction, lines parallel to the feed direction are emphasized.
- When the filter is stronger in the sub-scan direction, lines at right angles to the feed direction are emphasized.
- When the MTF filter is selected with SP6-59-1~5, the settings of SP6-6-1~10 (MTF Filter Setting) are used.

Adaptation Filter:

- Lines are less clear, but small characters are clear.

Smoothing Filter:

- Images are smooth, but text and lineart can become blurred.

6.3.4 MAIN SCAN MAGNIFICATION/REDUCTION

Changing the scanner speed enables reduction and enlargement in the sub-scan direction. However, the ECU board handles reduction and enlargement in the main scan direction. The processing for main scan magnification/reduction is the same as in the previous digital machines.

6.3.5 CENTERING

The timing for uploading data from the SBU is delayed, and the writing start position is changed to the center. (The standard writing position is in the corner.)

6.3.6 BINARY PROCESSING

In the ECU board, the 8-bit data is converted into 1-bit data for black or white pixels. The binary processing for the letter mode is different from that for the photo mode and the letter/photo mode as follows:

1) Letter mode: Binary processing
2) Letter/Photo mode: Binary processing
3) Photo mode: Binary processing + error diffusion + dithering

These processes are used as follows.

- Binary Processing with Gamma Curve Compensation -

This process converts each video signal level from 8-bit to 1-bit (black and white image data) in accordance with a threshold value.

The threshold value changes based on a compensation curve (Gamma curve) which corresponds to selected image settings. For example, if a darker image is selected, a compensation curve, which converts each pixel value to a higher number, is selected. This ensures accurate generation of the gray scale from black to white.

- Error Diffusion - (Photo mode only)

The error diffusion process reduces the difference in contrast between light and dark areas of a halftone image. This process corrects each pixel using the difference between it and surrounding pixels. It then compares the corrected pixels with the error diffusion matrix.

- Dithering - (Photo mode only)

Dithering compares each pixel with a pixel in the dither matrix. Several matrixes are available, to increase or decrease the detail on the copy.

6.3.7 ERASE SHADOW

The shadow at the centre of a book, borders of originals and so on are erased automatically. This mode is activated when master making is started while the platen cover or ADF is open.

6.3.8 MEMORY FUNCTION

ECU has 16 Mbytes of RAM and ACU has 128 Mbytes of RAM, which corresponds to the amount of memory required for an A3 original. This enables the following image editing functions.

- Memory Combine Mode (ACU)-

Combine: Combined images of 2 or 4 originals are printed on the same sheet of paper.

Repeat: Prints 2, 4, 8, or 16 repeated images on the same sheet of paper.

Custom Repeat: Images are repeated as often as the paper size allows.

- Overlay (ACU and ECU)-

Overlay merges two different originals onto the same sheet of paper.

- Stamp Printing Mode (ACU)-

This mode enables stamping modes such as, the date, page number, preset message, and user custom stamps.

- Make-up Printing Mode (ECU)-

The user makes command sheets to specify how various areas of the original will be processed. The user must be sure to scan the command sheets before the original. The ECU board modulates the image data for the command sheet and then stores the modulated command data on the memory board.

The image data for the original is also converted and modulated. The ECU board edits the modulated image data, the stored command area data, and the background pattern.

Positive/Negative can be used with this mode.

- Report Print Mode (ACU)-

This mode prints the following data:

- User reports
- Jam and error counter data
- The number of people in each class set by the user
- Number of prints and masters for each user code account
- SP mode data for service

- Image Rotation Mode (ACU)-

When the orientation for the original differs from the paper selected, the machine automatically rotates the original image 90 degrees to match the paper orientation.

User Tools – Master Making/Print Setting – Others – Auto Rotation can disable this mode.

6.4 THERMAL HEAD

6.4.1 SPECIFICATIONS

C262

- Length 303.42 +-0.1 (mm)
- Number of thermal head elements 7168
- Density of thermal head elements 600 dpi

C265

- Length 292.6 +-0.1 (mm)
- Number of thermal head elements 4608
- Density of thermal head elements 400 dpi

Thermal Head Control

The thermal head contains heating elements at a density of 600dpi:C262/400 dpi: C265. The thermal heating elements melt the over-coating and polyester film layers of the master, in accordance with the image signal for each pixel.

The PSU board applies power (VHD) to the thermal heating elements. The power varies from one head to another since the average resistance of each element varies. Therefore, when replacing the thermal head or power supply unit, it is necessary to readjust the applied voltage to the specific value for the thermal head.

Thermal Head Protection

The thermistor on the thermal head provides thermal head protection, preventing the thermal head from overheating when processing a solid image. The CPU checks for any abnormal condition when the Start key is pressed; it displays an SC code on the operation panel as follows:

SC Code	Conditions	Detecting Component
SC203	Over 54°C	Thermistor
SC202	Under - 20°C (Normally in this case, the thermistor is open, or a related connector is disconnected.)	Thermistor
SC201	When the pulse width that controls the thermal head energy becomes abnormal, master making stops and generates this SC code.	ECU board
SC200	The CPU monitors the ID signal from the thermal head, which identifies the thermal head type. If an abnormal ID signal is detected just after installing the master making unit in the machine, it generates this SC code.	ECU board

REMARKS FOR HANDLING THE THERMAL HEAD

Pay careful attention to the following remarks when servicing:

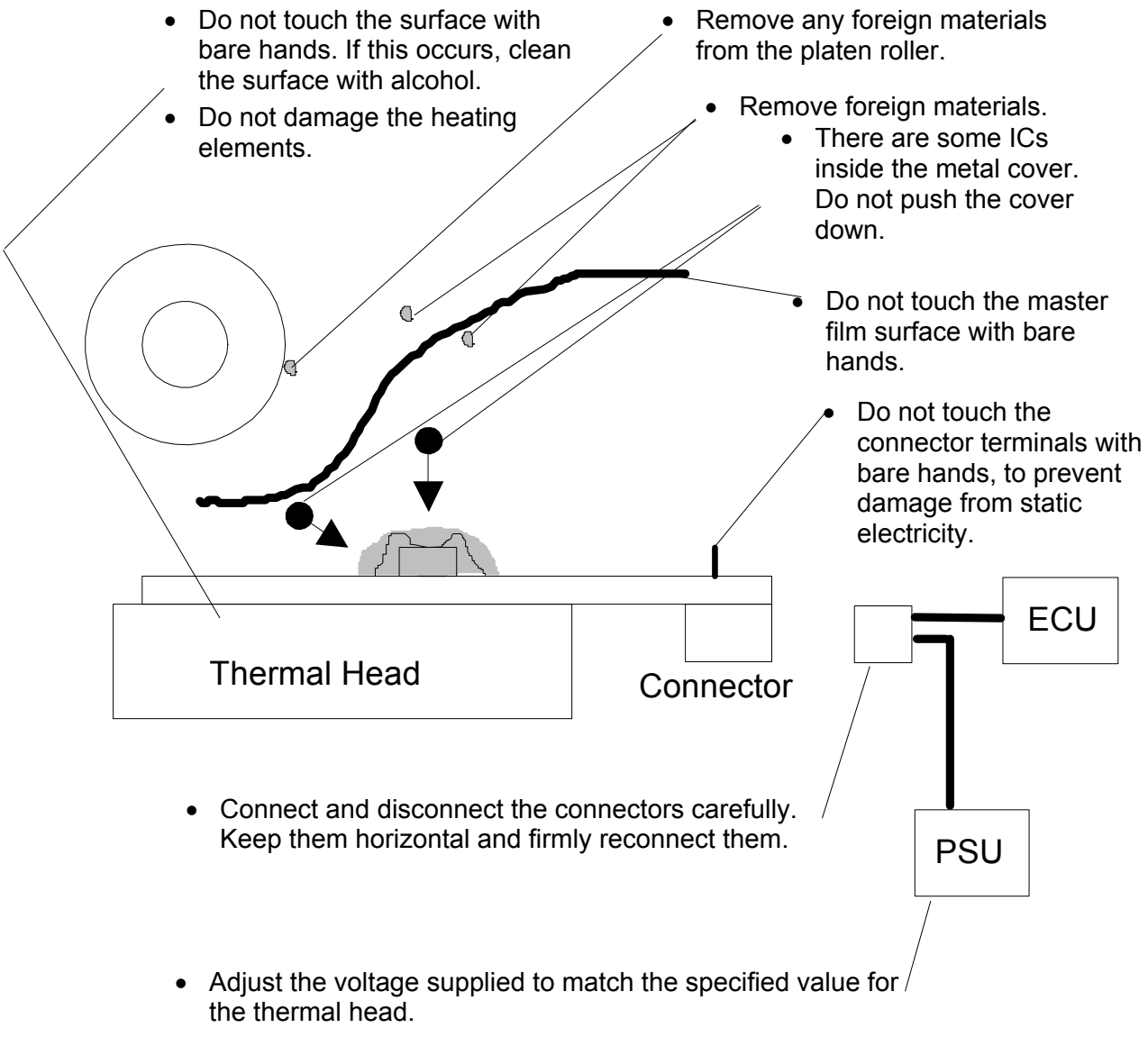

- Other Remarks -

Avoid using the machine under humid conditions. Moisture tends to condense on the thermal head, damaging the elements.

6.5 MASTER EJECT

6.5.1 OVERVIEW

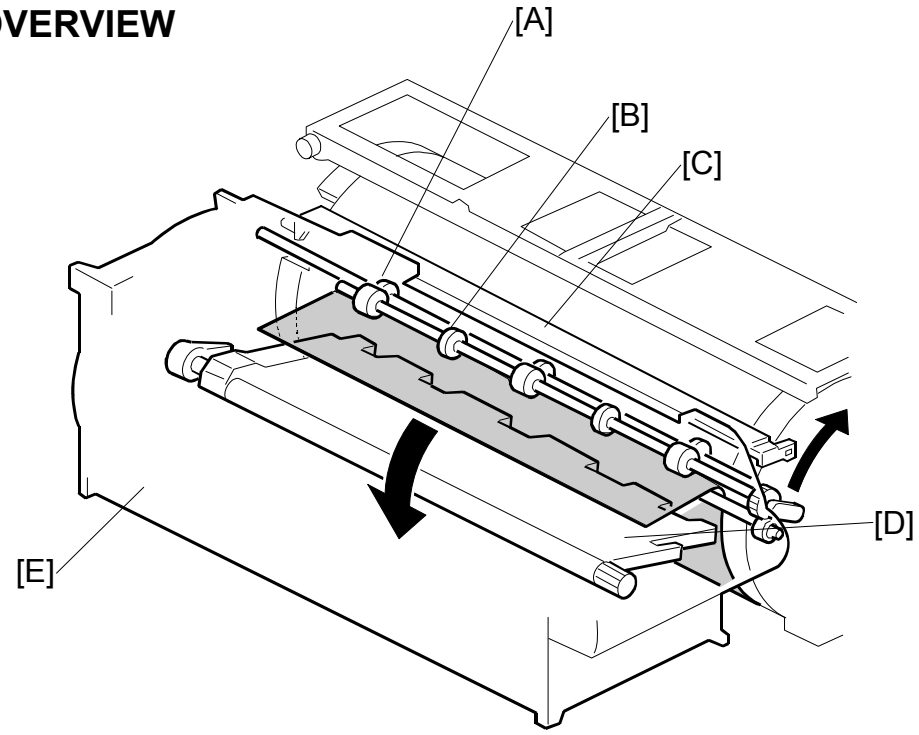

The master remains wrapped around the drum to prevent the ink from drying. Therefore, making a new master begins from the master ejecting process.

When the Start key is pressed to scan the original, the drum rotates from the home position to the master eject position. As soon as the drum reaches the master eject position, the drum master clamper [C] opens. The drum position lock mechanism locks the drum at this position to prevent the drum from moving during master ejection.

At the same time, the master pick-up roller [A] touches the drum, picking up the leading edge of the master on the drum. Then, the master is caught by the upper and lower master eject rollers [B] and is transported into the master eject box [E].

When the trailing edge of the master passes the roller, the pressure plate [D] begins to compress the master into the box.

Before this process is complete, the original scanning and master making has already started, and the drum will then rotate to the master making position.

6.5.2 MASTER EJECT MECHANISM

Overview

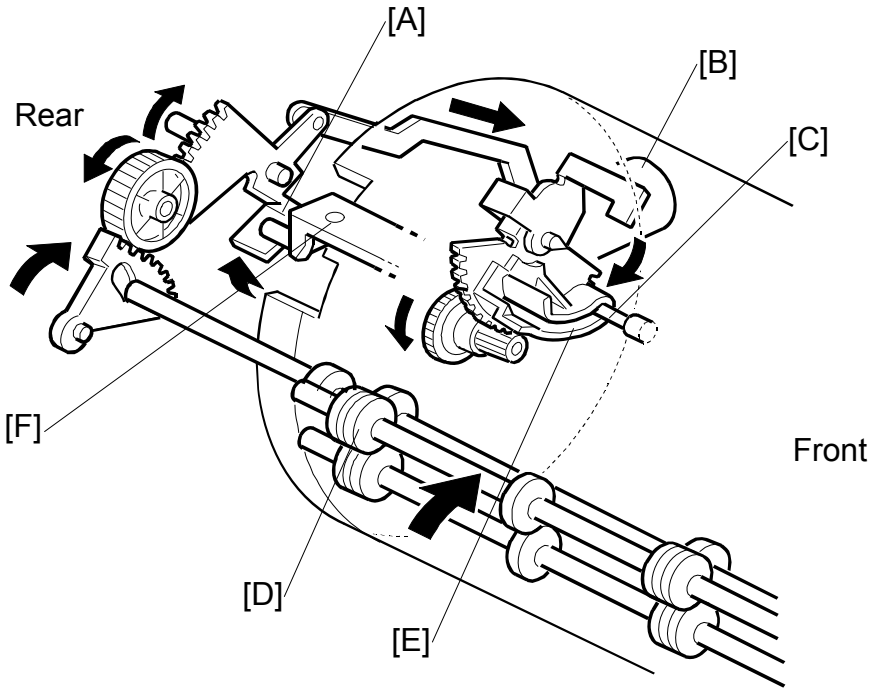

Two photosensors (the 1st and 2nd drum position sensors) and the feeler on the rear drum flange determine the drum position. The drum is at the home position when the feeler actuates the 1st drum position sensor. At this position, the drum master clamper, which clamps the leading edge of the master onto the drum, is located at the bottom of the drum. (For details, refer to Drum Drive Mechanism in the Drum section.)

The drum turns 114.5 degrees from the home position to reach the master eject position (there is no sensor for master eject position detection – main motor encoder pulses only). As soon as the drum stops, the clamper motor [B] starts to open the drum master clamper [F]. The master pick-up roller [D] moves against the drum at the same time, because it is connected through an idle gear.

A link plate connects the drum guide [E] to the clamper opening arm [A]. So, when the arm moves, the drum guide also moves, and this locks the drum position.

NOTE:
1) To lock the drum, the drum guide catches one of two studs at different positions on the drum. The drum guide catches one stud at the master eject position [C], and the other stud at the master making position.
2) The drum master clamper also opens when the drum is at the master making position. However, it uses a different clamper-opening arm. For details, refer to the Master Making section.
3) Do not clean the inside of the master clamper with alcohol or other strong solvents. Use a cloth dampened with water. This prevents the magnetic force from weakening. This part requires periodic cleaning.

Drum Lock Mechanism

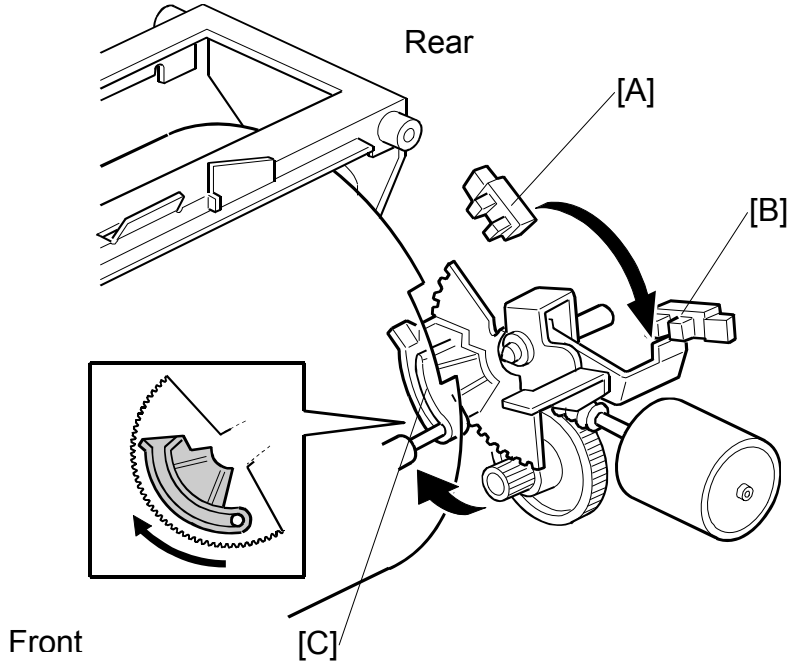

The clamper motor drives the drum guide [C]. The clamper closed position sensor [A] and clamper open position sensor [B] monitor the position of the drum guide.

When the drum reaches the master eject position, the drum guide moves until the clamper open position sensor [B] is actuated then deactuated (the actuator must go through the sensor). This engages the stud on the rear drum flange.

Before the drum starts rotating to the master making position, the drum guide returns to the home position. The clamper closed position sensor [A] determines this position.

NOTE: The same drum guide also moves when the drum is at the master making position. (There is another stud on the rear drum flange, which is used to secure the drum at the master making position.)

A link plate at the master eject position synchronizes the master clamper with the drum guide movement.

To open the clamper, the drum guide (with the clamper opening arm) must move a greater distance than at the master making position. Therefore, at the master eject position, the drum guide moves (to open the master clamper) until the clamper open position sensor [B] turns on (interrupted by the feeler) and then turns off again, as shown in the diagram. Refer to the Master Feed section to compare the two mechanisms.

Master Pick-up Roller Drive and Master Clamper Open

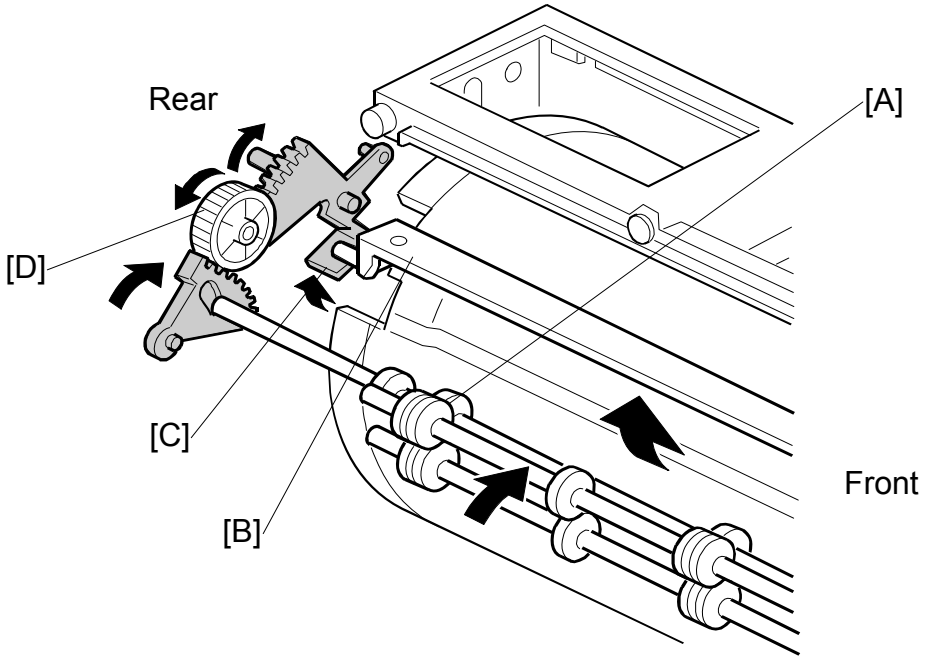

When the clamper motor opens the drum master clamper [B], the master pick-up roller [A] contacts the leading edge of the master on the drum. The clamper motor moves the master pick-up roller against the drum through the idle gear [D], while driving the clamper opening arm [C].

At the same time as the drum master clamper [B] closes after the master is picked up, the master pick-up roller [A] also moves back to the original position.

The drum guide is also released at the same time. The drum continues turning towards the master making position while the used master is removed from the drum.

Master Eject and Transportation

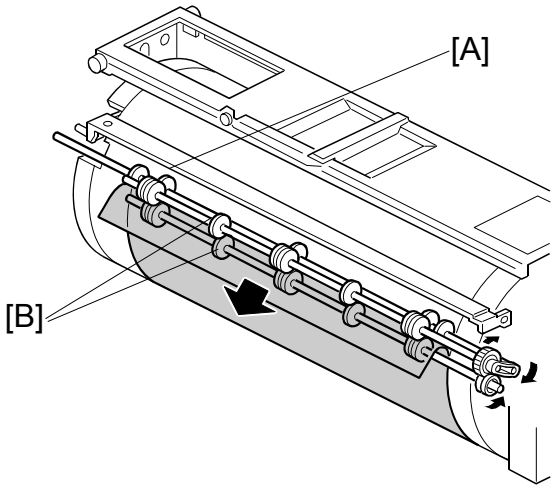

The master pick-up roller [A] and the upper and lower master eject rollers [B] all turn together. They start turning as soon as the drum reaches the master eject position.

The rollers stop once the leading area of the master is picked up from the drum. (The master eject sensor detects this.) Then, when the drum starts turning, they turn on again to feed the ejected master to the eject box while the drum turns towards the master making position.

The master eject sensor (not shown) is located just under the lower master eject roller, and it monitors the master feeding. If the master is not properly picked up, i.e. it does not activate the sensor; the operation panel displays a master eject jam message.

Master Eject Roller Unit Drive

The master eject motor [A turns the master pick-up roller [B with the upper and lower master eject rollers [C.

When the unit is slid out (explained below), the joint [D] disengages.

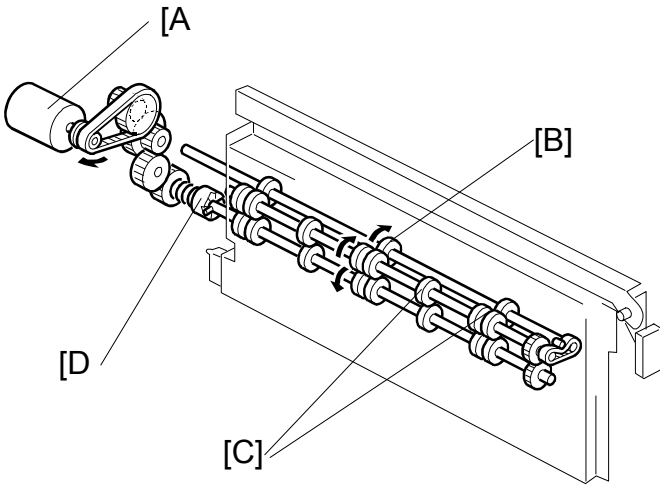

Master Eject Roller Unit Slide-out Mechanism

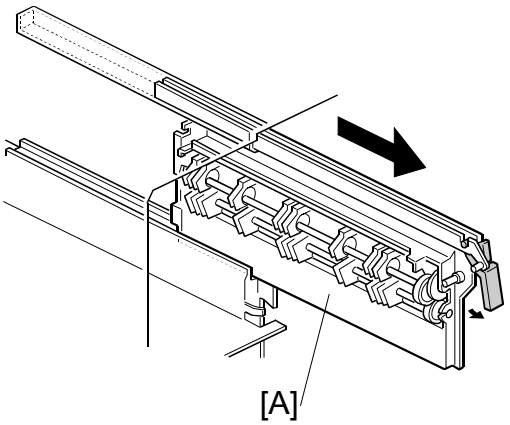

The master eject roller unit [A] can be slid out of the machine as shown for easy master jam removal.

The unit contains the master pick-up roller, upper and lower master eject rollers, and the master eject sensor.

6.5.3 MASTER EJECT BOX MECHANISM

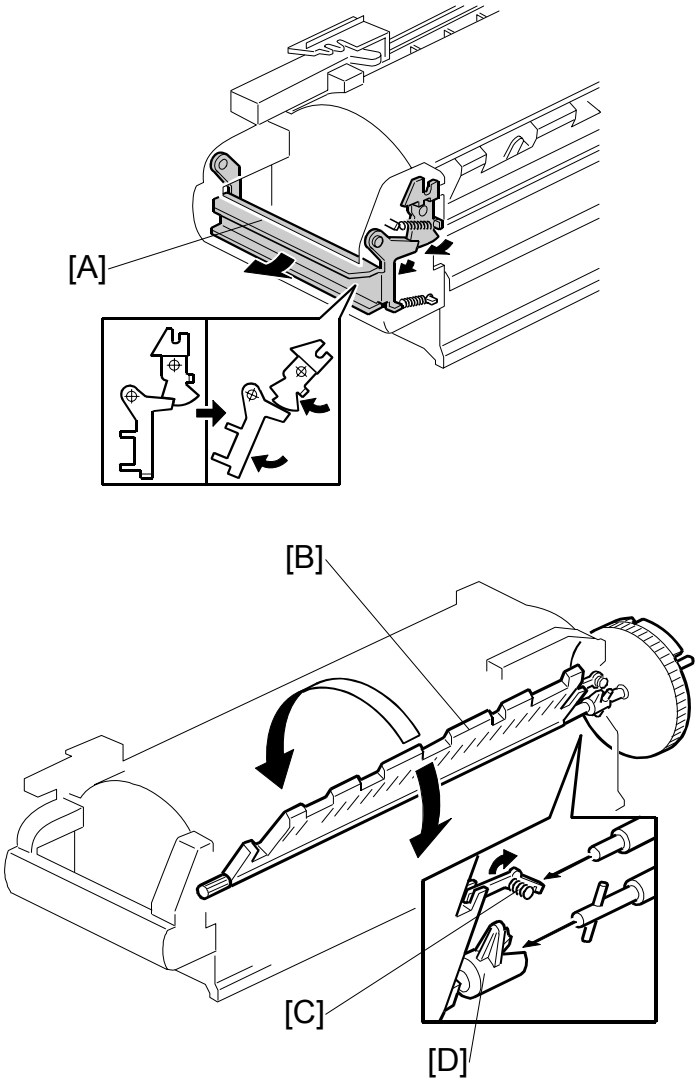

The user can slide the master eject box out from the operation side of the machine. The front handle of the box [A] has a lock mechanism as shown above.

The master eject box contains a pressure plate [B], which compresses the ejected masters in the box. The pressure plate also works as a guide plate feeding the ejected master into the box.

An independent dc motor, the pressure plate motor, drives the pressure plate. The motor is in the pressure plate drive unit, on the rear frame of the machine separate from the master eject box.

When the master eject box is slid out, the joint [D] for the pressure plate drive disengages. At the same time, the lock lever [C] turns, due to tension from a spring, to hold the pressure plate [B] in the home position.

When the master eject box is re-installed, the drive joint [D] is connected and the pressure plate lock lever [C] is released as shown above.

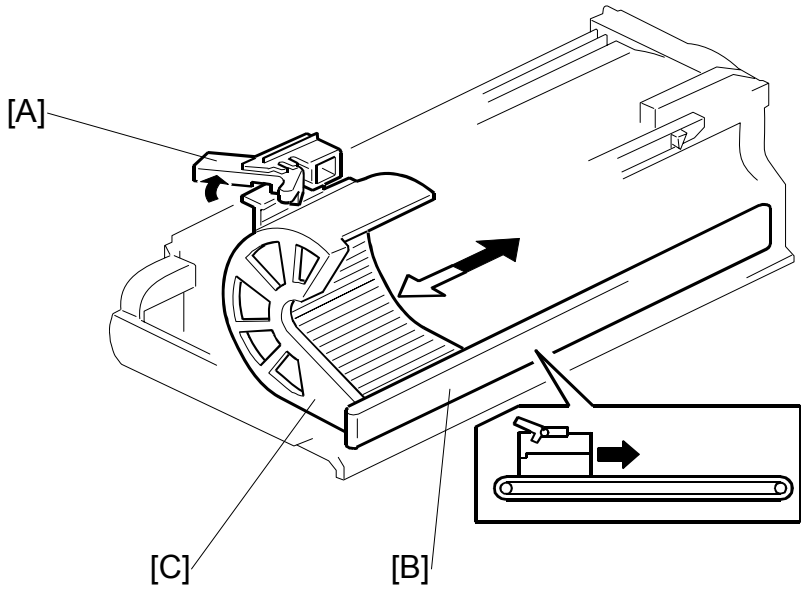

The ejected masters in the box can be taken out by sliding the eject lever [A]. The inner bottom case [C] moves towards the rear of the box.

Masters are ejected from an open door at the rear of the box. The side opposite the eject lever side [A] of the inner bottom case is connected to a belt [B]. This helps the inner bottom case move smoothly.

When the master eject box is removed, a push switch (the eject box set sensor) turns off, and the operation panel displays a message.

6.5.4 MASTER EJECT BOX LOCK MECHANISM

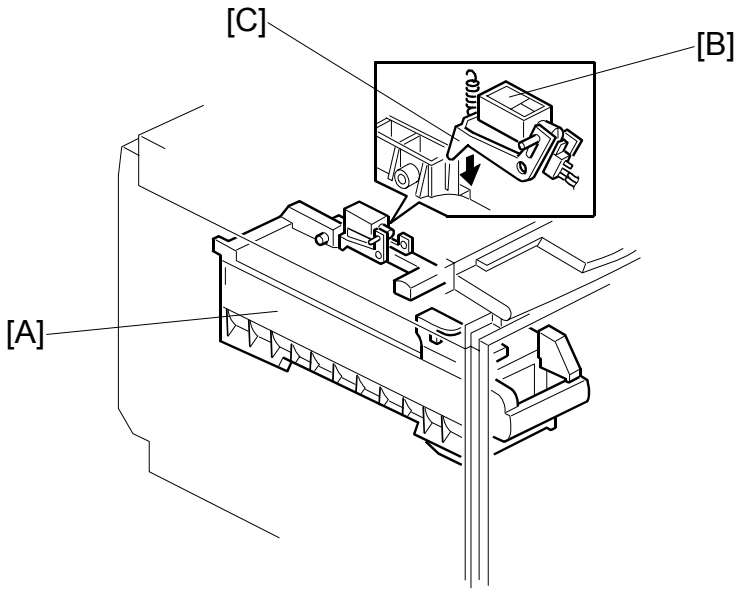

In the ‘higher’ security mode, the master eject box [A] cannot be taken out. The master eject box lock solenoid [B] pushes down the lever [C] and locks the master eject box.

This type of solenoid (magnetic latching solenoid) stays in position when power is turned off. Another pulse of power is necessary to return the solenoid to the initial position. As a result, the box remains locked when power is switched off.

A sensor (not shown in this diagram) detects the status of the lock mechanism.

When the master is being ejected and compressed, the master eject box is locked regardless of the setting of the security mode.

CAUTION: Do not try to take out the master eject box while the higher security mode is on.

To select higher security mode, set User Tools – System Settings – Administrator Tools – Security Option to ‘Higher’.

6.5.5 PRESSURE PLATE DRIVE MECHANISM

Overview

There are three phases.

- Homing
  At power on or when recovering from an error or jam, the machine makes sure that the pressure plate is at home position. This is because, if certain errors occur, the pressure plate may not be in the home position at the start of a job
- Master ejection
  The pressure plate rotates into a position where it can act as a feed guide for the used master on its way to the eject box.
- Compression
  The pressure plate compresses the master into the box.

Drive

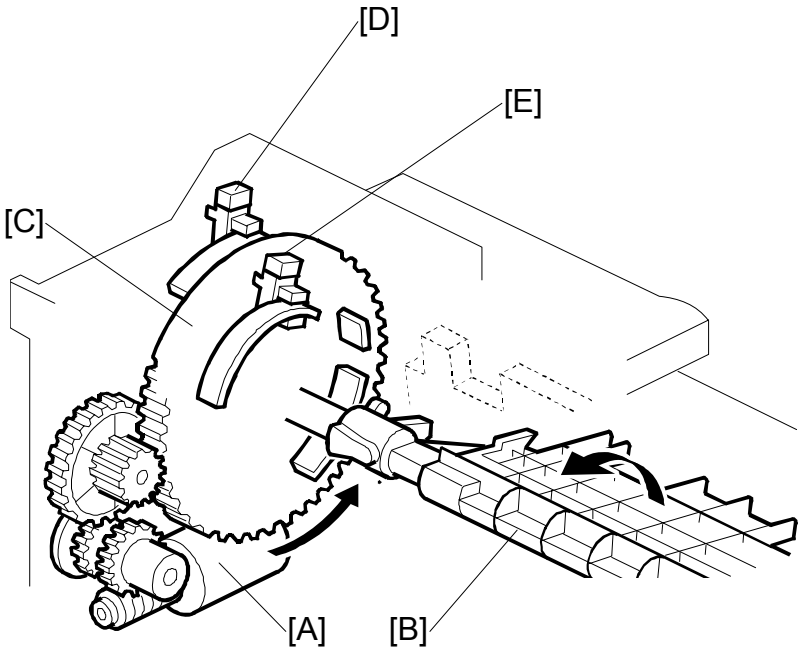

The pressure plate motor [A] drives the pressure plate [B] through the pressure plate gear [C]. This gear contains actuators for the home position sensor [D] and the limit position sensor [E]. These two sensors monitor the pressure plate position.

The diagram shows a front view of the mechanism. The actuators are on the rear of the pressure plate gear, which is shown as see-through for ease of viewing.

Homing Operation

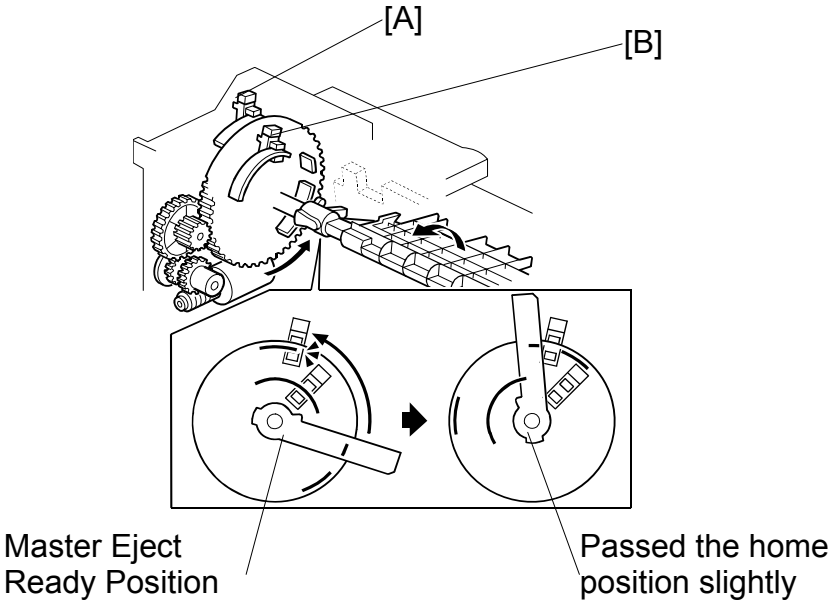

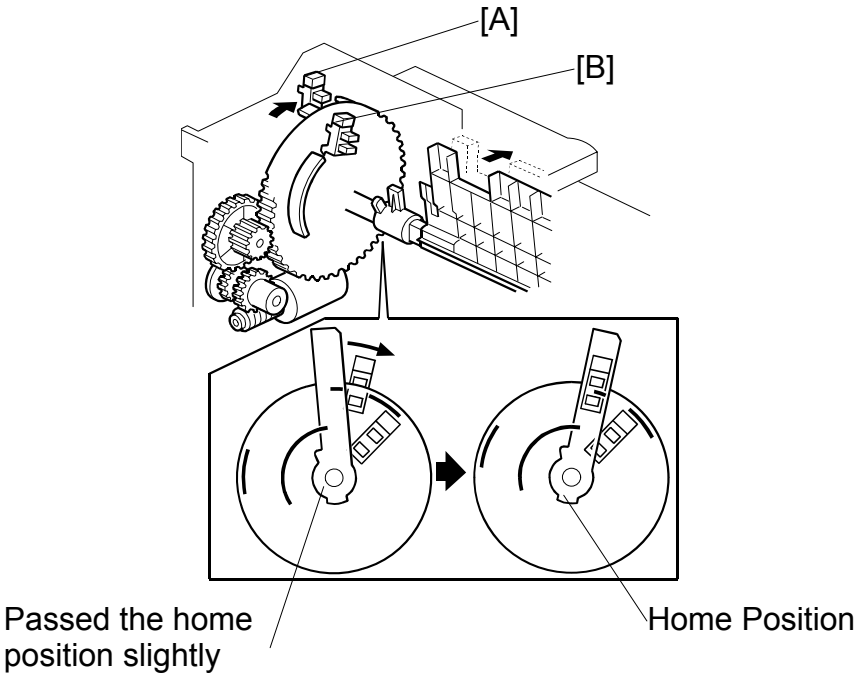

At power on or when recovering from an error or jam condition, the machine carries out the pressure plate homing operation.

If certain errors occur, the pressure plate may not be in the home position. The homing operation starts by turning the pressure plate toward the drum and then it returns to the home position.

The homing operation is as follows:

1. The pressure plate turns clockwise (as seen from the operation side) until both the pressure plate HP sensor [A] and the limit position sensor [B] are actuated.

2. As shown in the upper right diagram, the pressure plate turns counterclockwise until the home position sensor [A] is actuated and de-activated twice. The status of the sensor [A] changes: on ⇒ off ⇒ on ⇒ off.
3. The pressure plate has just traveled slightly passed the home position. Then, as shown in the lower right diagram, the pressure plate again turns clockwise to return to the exact home position. The home position sensor status changes now from: off ⇒ on ⇒ off.

Shift to the Master Eject Position

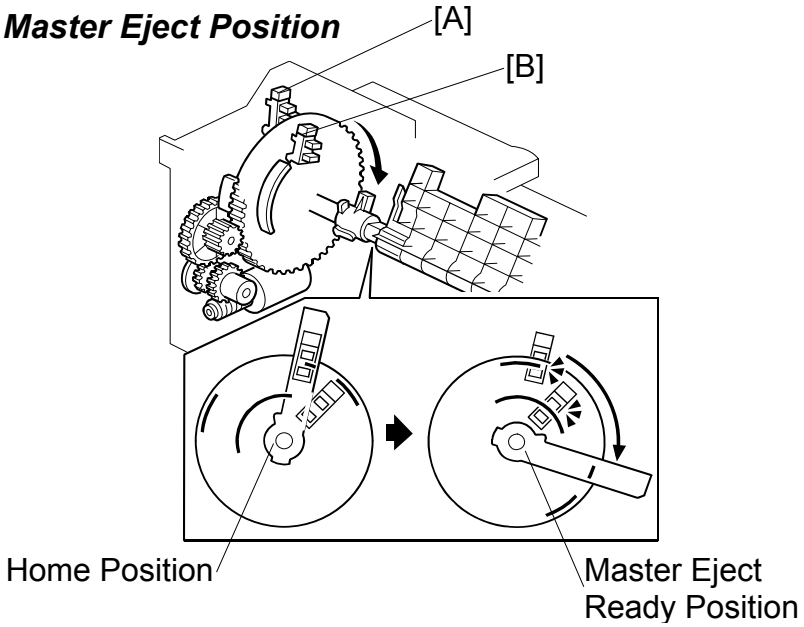

When the Start key is pressed to make a new master, the drum turns to the master eject position. During this period, the pressure plate travels to the master eject ready position.

The pressure plate turns clockwise (as seen from the operation side) until both the pressure plate HP sensor [A] and the limit position sensor [B] are actuated.

Ejected Master Compression

When the ejected master has been fed to the master eject box, the pressure plate compresses the master. During this operation, the machine can recognize how full the eject box is by monitoring the lower limit and home position sensors.

When there are no or very few masters in the box

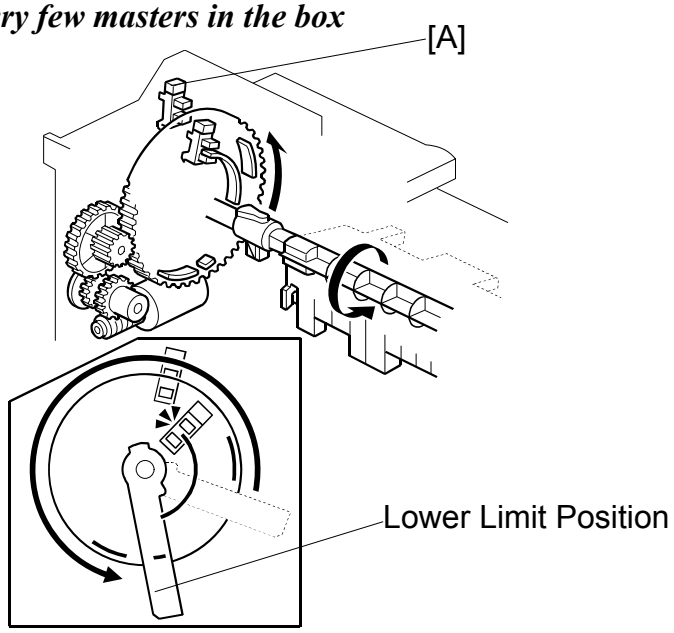

If there are no or only a few masters in the box, the pressure plate can move to its lowest position. The pressure plate limit position sensor detects this position.

The pressure plate turns counterclockwise from the master eject ready position until the limit position sensor [B] has been actuated twice. The sensor status changes: on ⇒ off ⇒ on.

The pressure plate stays at the lower limit position for 2 seconds, then returns to the home position.

When there are a lot of masters

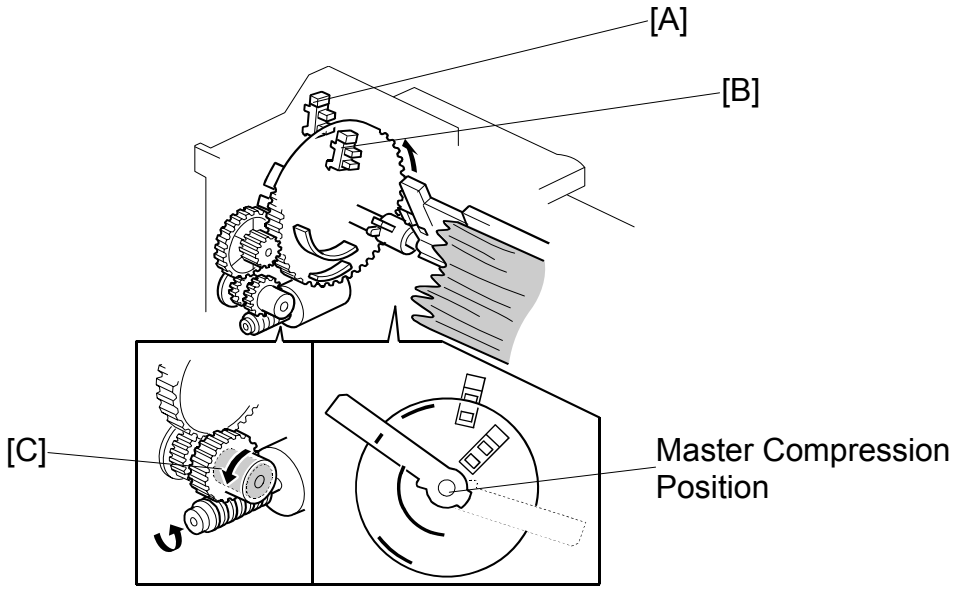

If there are a lot of used masters in the box, the pressure plate cannot move to the lower limit position.

If the lower limit position sensor [B] is not actuated within 7 seconds after the pressure plate starts traveling from the master eject ready position, the pressure plate motor stops.

The pressure plate stays in the same position for 2 seconds to compress the masters. Then, it returns to the home position.

There is a torque limiter [C] built into the gear. When the built-up masters in the box block pressure plate movement, the torque limiter allows this gear to slip.

Master Box Full Detection Mechanism

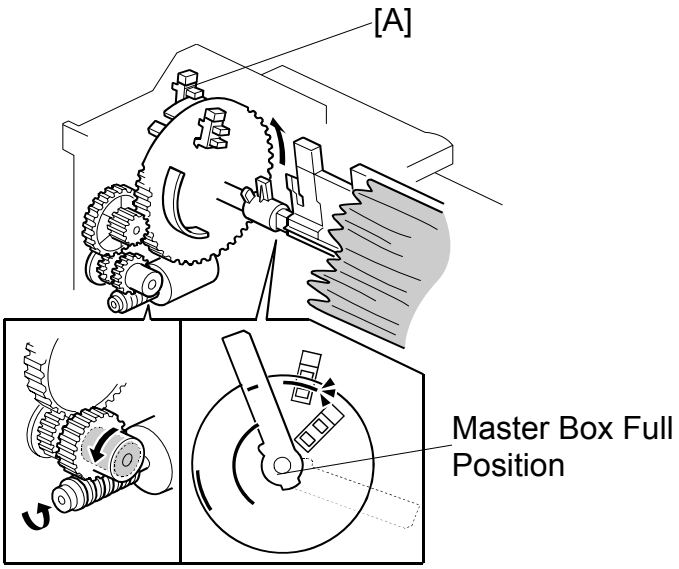

As explained above, the pressure plate motion range narrows as the ejected masters build up in the box. The stopping position of the pressure plate therefore gets closer to the home position.

When the pressure plate cannot travel past the master box full position from the master eject ready position, this means that the master box is full.

In this case, the home position sensor [A] remains actuated as shown on the right.

The home position sensor status changes (from the master eject ready position): on ⇒ off ⇒ on ⇒ off ⇒ on, and stays on. This means the master box is full and the operation panel displays a message.

Pressure Plate Operation Timing Charts

Master Eject jam (B jam)

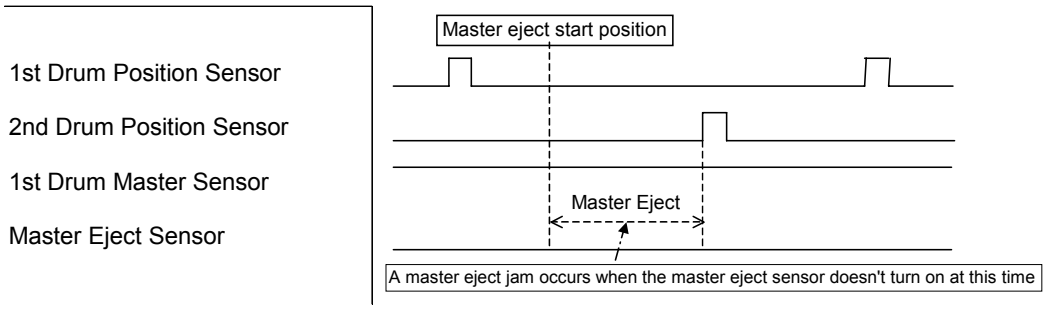

The master eject sensor under the master eject roller detects master eject jams. When the master eject sensor does not detect a master from the starting the drum until the 2nd drum position sensor turns on, a master eject jam (B jam) will occur. Then, the drum turns to home position, and the machine stops.

Master compression error (E jam)

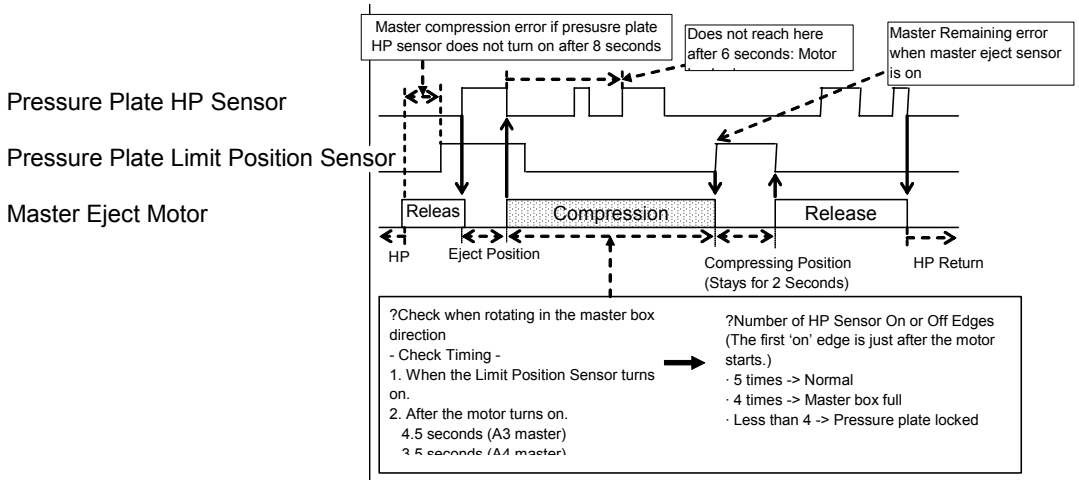

This timing chart shows how the machine counts the number of home position sensor on and off edges to check if the eject box is full or if the mechanism is jammed.

The signal is checked when:

- The limit position sensor turns on – this is when the pressure plate has turned all the way to the lower limit position inside the box, which is only possible if the box is fairly empty.
- At 4.5 seconds (A3 master) and 3.5 seconds (A4 master) after the motor turns on.

6.6 MASTER FEED

6.6.1 OVERVIEW

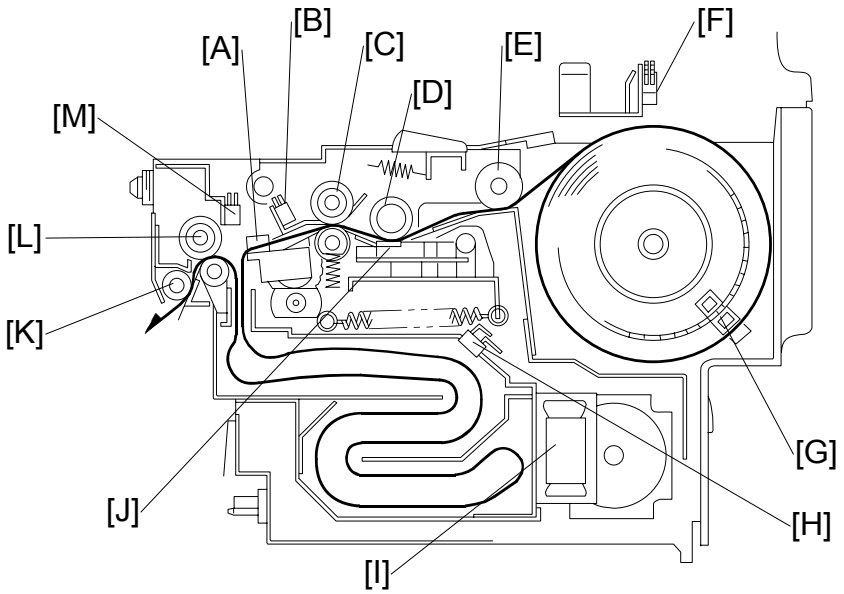

A: Cutter
B: Master Set Sensor
C: Tension Roller
D: Platen Roller
E: Master Set Roller
F: Master End Sensor
G: Master Amount Sensor
H: Master Duct Sensor
I: Master Vacuum Fans
J: Thermal Head
K: Clamper Tension Roller
L: Master Feed Control Roller
M: Master Edge Sensor

Original scanning starts when an original is set and the Start key is pressed. Master making begins at the same time. Although master ejecting is done first, scanning starts very soon after.

The master is a low fiber content paper coated with a thin heat-sensitive film. The heating elements of the thermal head [J] burn the film to copy the scanned image.

The master is fed while the thermal head develops the image on it. The master vacuum fans [I] temporarily suck the fed master into the master buffer duct. This is done because the used master is still being ejected from the drum. When the drum comes to the master making position, the master is fed to the drum and the drum master clamper on the drum clamps the master.

The drum then turns to wrap the master around the drum. When the master has been pulled out of the duct and is pulled tight at the cutter, the cutter [A] cuts the master.

At the same time as the master is wrapping, a sheet of paper, called the trial print, is fed. This ensures that ink transfers to the master on the drum, and that there is a sufficient density of ink for the print run to start. The drum then returns to the home position and is ready for printing.

6.6.2 MASTER SET MECHANISM

Master Roll Set

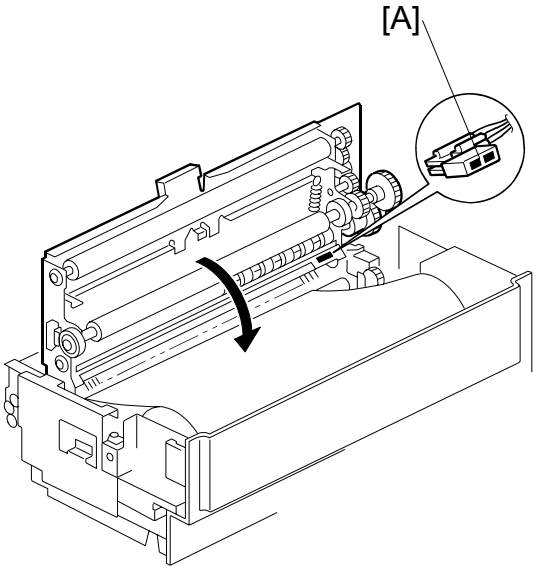

The master set sensor [A] checks to see if the master roll was installed properly.

Master Feed and Stop Control (Edge Detection)

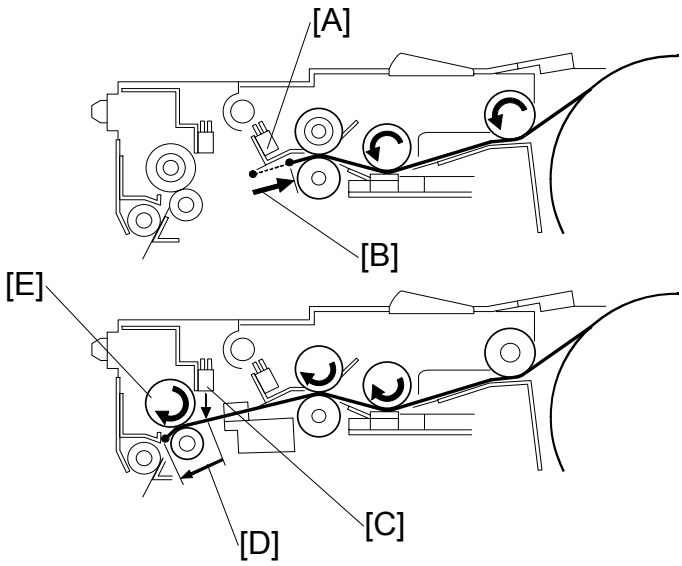

After the master making unit is inserted, the master set sensor [A] detects the leading edge of the master. The master is fed in reverse [B] until the master set sensor turns off.

After that, the master is fed forwards, and the master edge sensor [C] checks the leading edge of the master.

The master is fed an additional 21 mm [D] after the master edge sensor [C] turns on. It is now caught by the master feed control roller [E] and it stops. This is the stand-by position for master making.

NOTE: 1) The master set mechanism does not start until the master set sensor [A] turns on. If the sensor does not turn on, a master set error occurs.
2) A master feed error occurs if the master set sensor does not turn OFF for more than 5 seconds while the master is fed in reverse.

Master End Detection

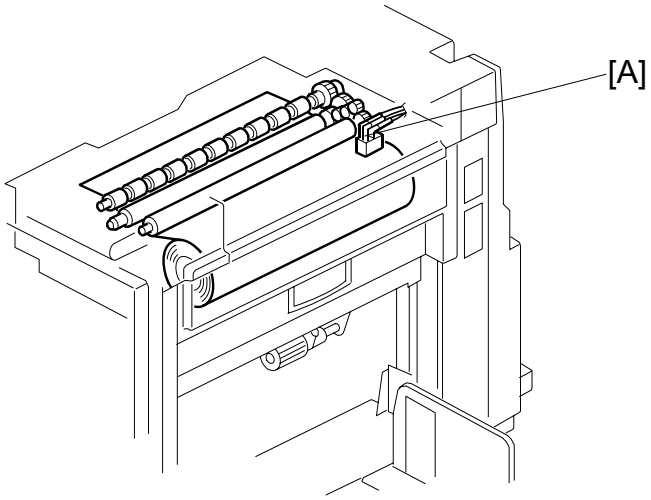

There is a solid-fill black area at the end of the master roll. When the master end sensor [A] detects this area, the operation panel displays the master end message.

Master Amount Detection

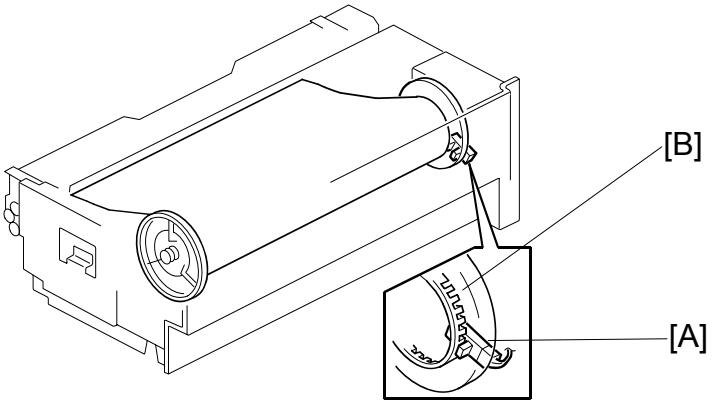

The master amount sensor [A] detects the amount of master that remains on the roll. To do this, it counts the slits [B] in the flange while the flange turns. The speed of rotation increases when the diameter of the master roll decreases. From the measured speed of rotation, the CPU calculates the remaining amount of master on the roll.

The display panel shows the remaining master amount when the main switch is turned on, if the remaining amount of master is less than half.

NOTE: User Tools – System Settings – Mode Setting – Master/Ink Remaining Volume must be “On”. The default is “Off”.

6.6.3 MASTER MAKING AND FEED MECHANISM

Master Feed Mechanism

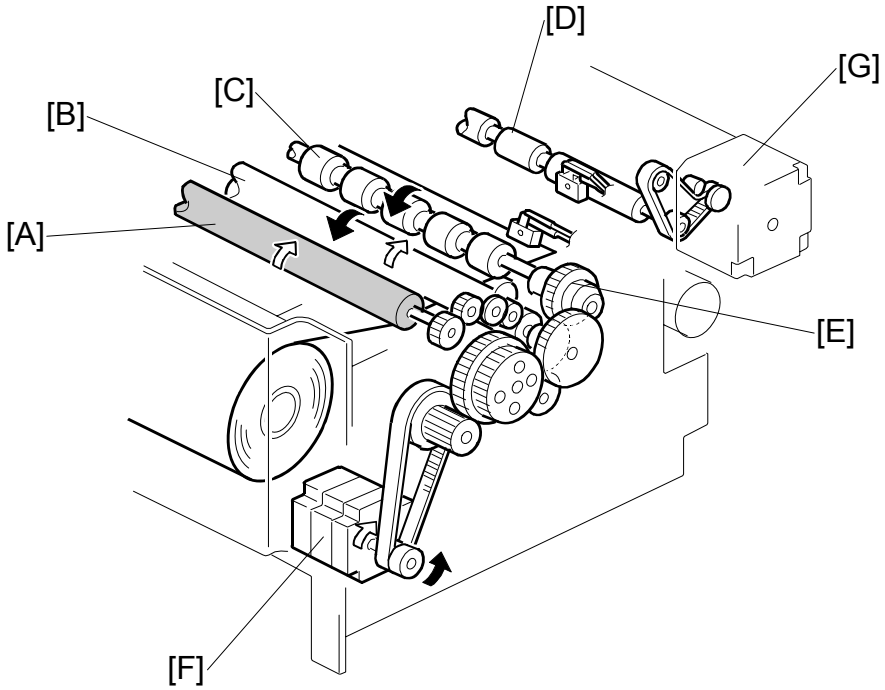

The master feed motor [F], a stepper motor, drives the master set [A], platen [B] and tension [C] rollers.

The master feed control motor [G] drives the master feed control roller [D].

The tension roller feeds the master slightly faster than the platen roller, to prevent the master from creasing. Therefore, the master between the platen roller and thermal head is always under tension.

There is a torque limiter [E] built into the tension roller drive gear. This allows the tension roller to become free from the master feed motor drive when the master is under excessive tension, to prevent damage to the master.

In the diagram, the black arrows show the roller directions when the master is fed forwards. The white arrows show the mechanism when it feeds the master in reverse.

Platen Roller Pressure Release

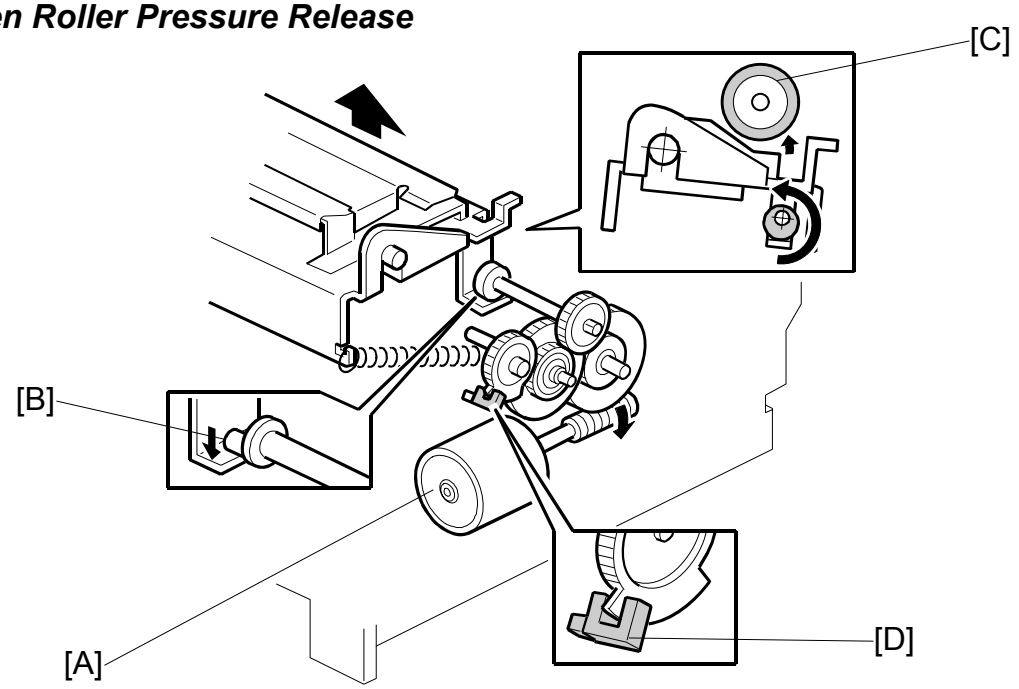

The platen release motor [A] gives half a turn to the platen release cam [B] to apply or release the platen roller [C] pressure. As the motor turns, the actuator on the gear interrupts the platen release sensor [D]. When the pressure is released, the actuator interrupts the sensor.

NOTE: When installing the gear with the actuator, remember that the setting position depends on the platen release cam position. For details, refer to the Replacement and Adjustment section.

Just before master making, the platen release motor starts turning until the sensor is inactive; this indicates that the platen pressure is now applied to prepare for master making.

When master making is complete, the motor turns again until the sensor is activated, releasing the platen pressure. This allows the user to remove a jammed master. Also, in standby mode, there is no pressure between platen roller and thermal head, so that the user can take out the master. Also, this makes the life of the thermal head longer, and prevents the platen roller from being deformed.

Master Buffer Mechanism

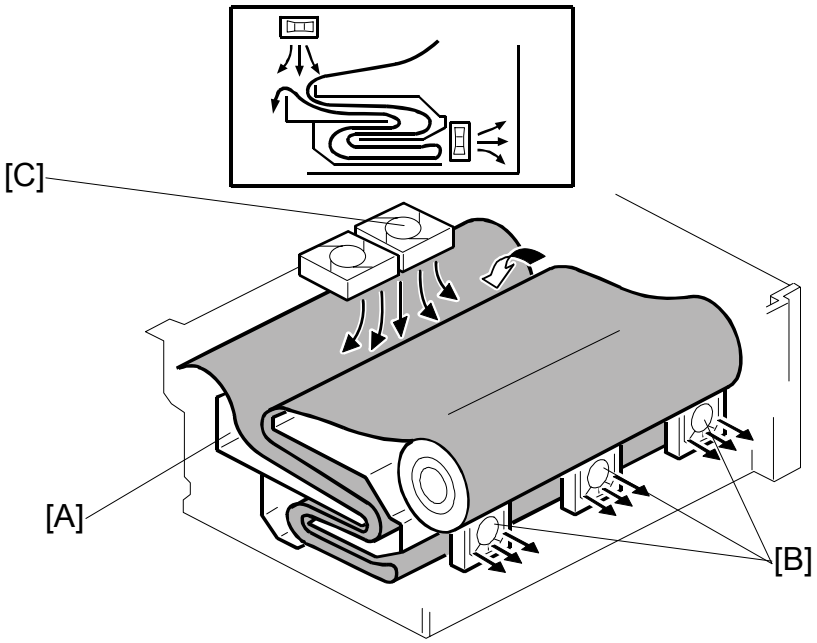

To minimize master processing time, the master is stored in the master buffer duct [A] after the thermal head transfers the image to it. The stored master is fed out from the duct when the drum reaches the master making position after master ejecting.

The master buffer duct is located under the master feed path. A two-level chamber inside the duct can hold a sufficient length of the master for A3 printing.

As soon as master making starts, the three master vacuum fans [B] start turning, creating suction to guide the master into the duct [A]. At this time, the master feed control roller has already caught the leading edge of the master. This roller does not start turning until the drum reaches the master making position and the master clamper opens.

The master is fed while the thermal head writes the image on it. With the leading edge of the master stopped, the suction guides the fed master into the master buffer duct and stores it as shown in the above diagram.

When the drum comes to the master making position, the master feed control roller starts turning and feeds out the master that is stored in the duct.

The master buffer fans [C] provide air to make sure that the master does not stick together in the master buffer duct.

6.6.4 WRAPPING THE MASTER AROUND THE DRUM

Drum Lock and Master Clamper Open

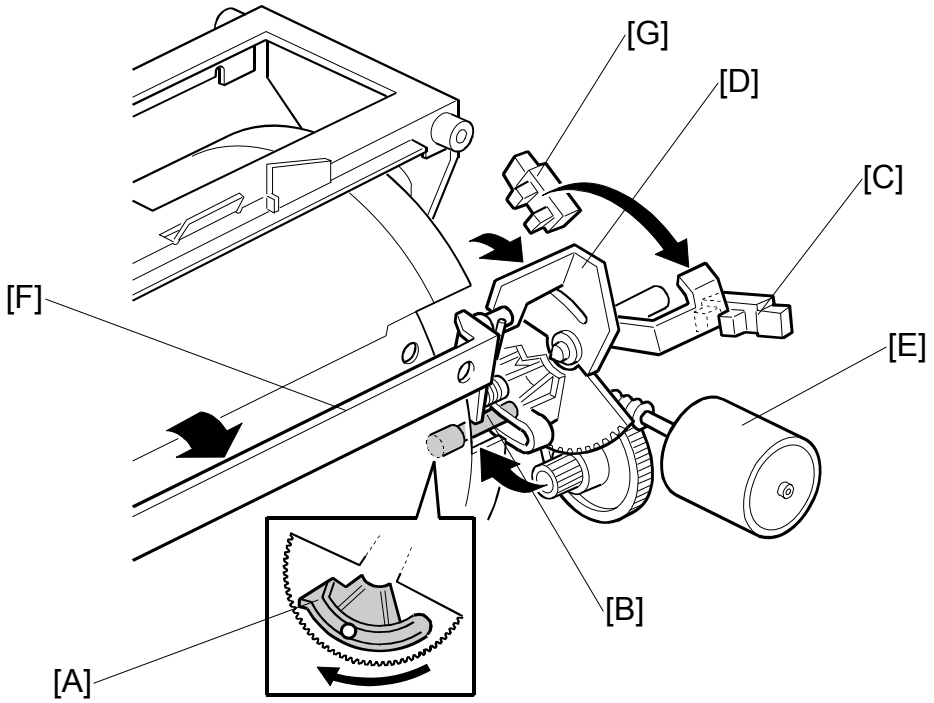

The drum guide [A] holds the drum at the master eject and the master making positions.

When the drum reaches the master making position, the drum guide moves to engage the stud [B] on the rear drum flange until the clamper open position sensor [C] is actuated. (The other stud was used for the master eject position.)

The master clamper opening arm [D] is just above the drum guide. The arm is different from the one used for opening the master clamper at the master eject position. The clamper motor [E] drives the arm and opens the master clamper [F], in synchronization with the drum guide movement.

The drum guide moves (to open the master clamper) until the clamper open position sensor is interrupted by the feeler. Then it stops immediately (unlike at the master eject position of the drum) as shown in the diagram.

Before the drum starts turning to start wrapping the master on the drum, the drum guide returns to the home position until the clamper close position sensor [G] is activated. The master clamper opening arm also returns, closing the master clamper.

CAUTION: Do not use alcohol to clean the magnet of the master clamper.

Master Feed Control Roller Mechanism

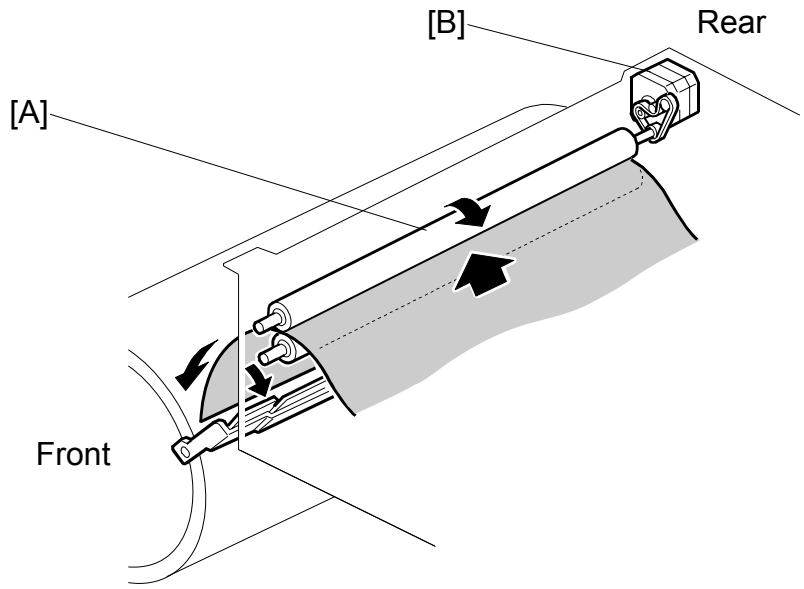

The master feed control roller [A] is driven by the master feed control motor [B] as shown. The master feed control roller turns in the following cases:

- When a master roll is put in the machine, the master is fed until the master feed control roller catches the leading edge of the master.
- During master clamping, the master feed control roller turns and sends the leading edge to the clamper position.
- While the master is being wrapped around the drum, the master feed control roller turns to feed the master, in synchronization with the drum rotation.

Master Clamping and Wrapping around the Drum

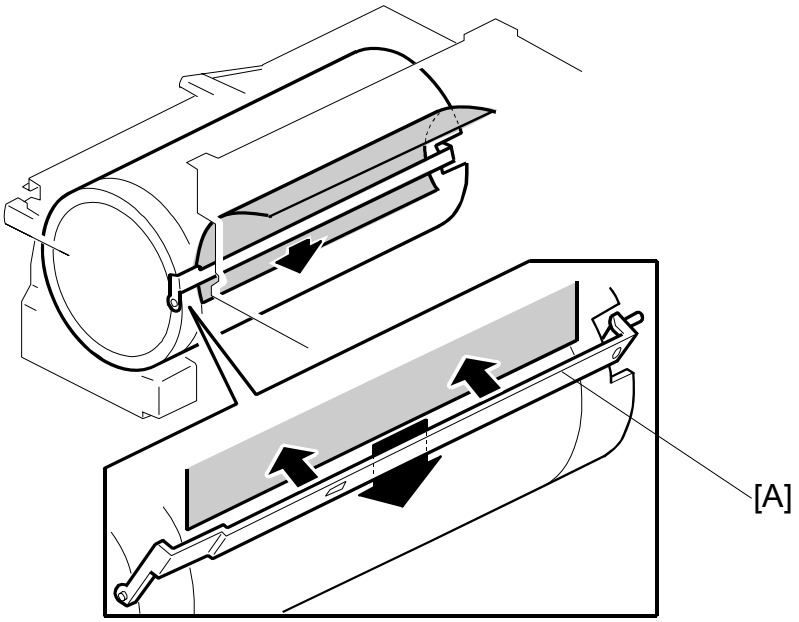

The master feed control motor turns on to feed out the master from the master buffer duct. The master is fed out 46.5 mm and reaches the drum master clamper [A]. The master feed control motor turns off temporarily.

The master clamper is closed and the drum starts turning to wrap the master around the drum. At the same time, the master feed control motor turns on again to feed the master, synchronizing it with the drum rotation.

When master making is complete and the master is stored in the master buffer duct, the drum turns continuously to wrap the master. The cutter cuts the master when there is no master left in the duct, and the master at the cutter is stretched tightly; this ensures a clean cut.

A sheet of paper, called the trial print, is fed at the same time as the master wrapping. To ensure that ink transfers to the master on the drum, the drum rotates at its lowest speed (16 rpm). This ensures that the print run starts up with a sufficient ink density.

The drum then returns to the home position, ready for printing.

Cutter Mechanism

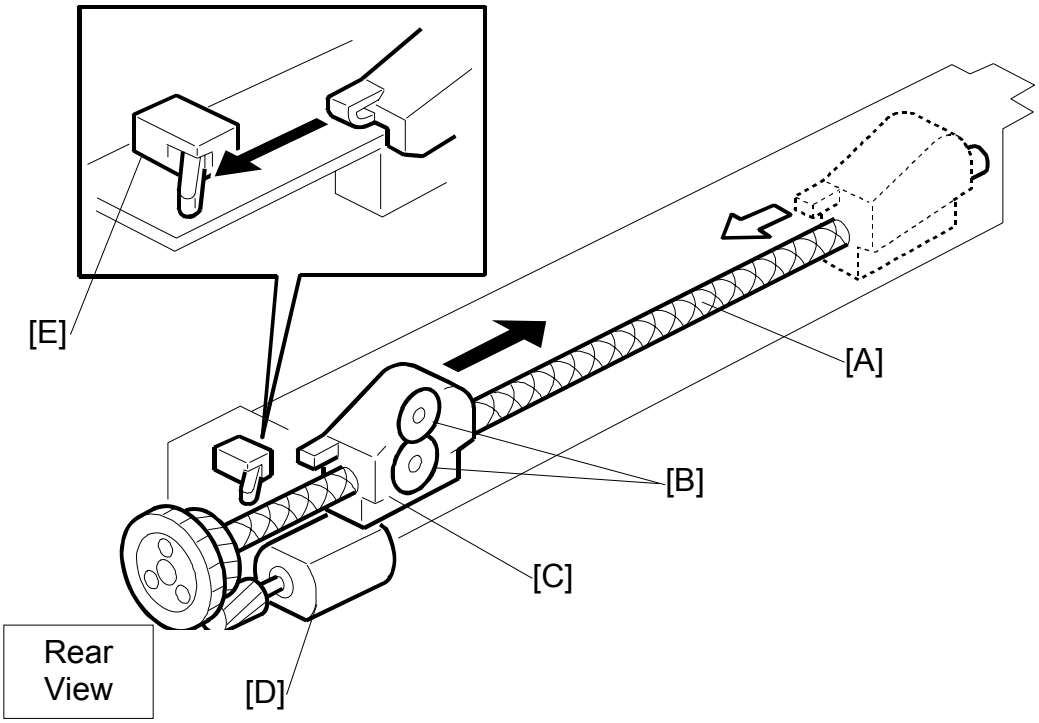

The cutter motor [D] drives the screw shaft [A], moving the cutter holder [C] forward and backward.

There are two cutter blades [B] in the holder. While the cutter holder [C] travels to the front (the operation side of the machine), the blades cut the master. The cutter motor keeps turning in one direction. However, the cutter holder returns to the home position when it reaches the front end of the cutter unit because of the two different spirals threaded on the screw shaft [A].

When the cutter holder reaches the home position, the cutter home position sensor [E] is activated by the holder and the motor stops.

Master Buffer Duct Entrance Control

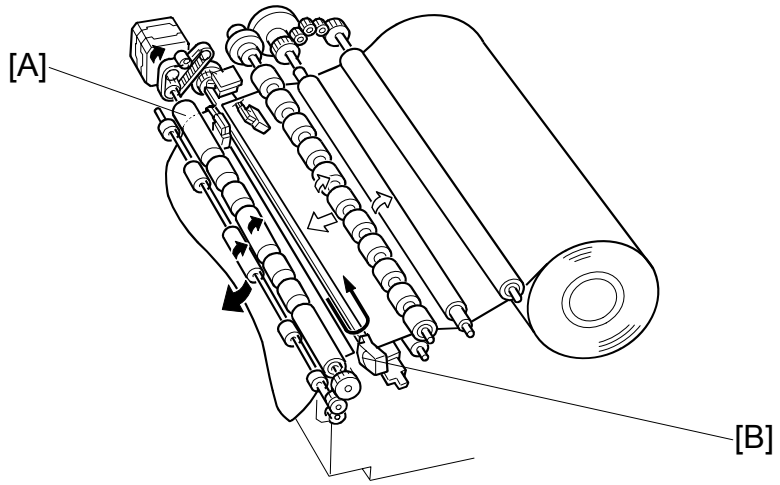

When the thermal head has finished making the master and the master has been fed out of the duct, the cutter [B] will cut the master.

To prepare for the next master making, the master feed motor turns until the master feed control roller [A] catches the leading edge of the master roll. The leading edge of the roll is fed 30 mm past the cutting position, then it is stopped.

At this time, the master edge sensor is not used to detect when to stop the master. The master edge sensor only controls the master stop position at the master feed control roller after a roll is put into the machine.

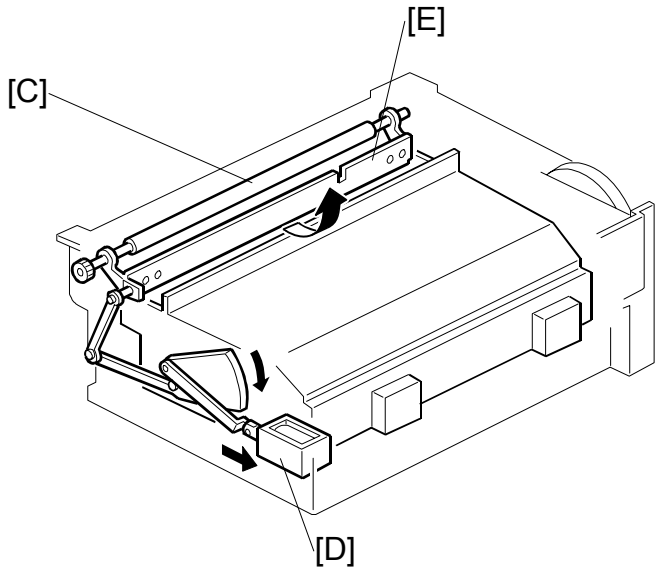

While the master is being transported to the master feed control roller [C], the duct entrance solenoid [D] closes the master buffer duct entrance plate [E]. This prevents the duct entrance from catching the leading edge of the master.

After the master feed control roller [C] catches the master leading edge, the entrance plate is opened. (The normal position of the entrance plate is open.)

Misfed Master Detection

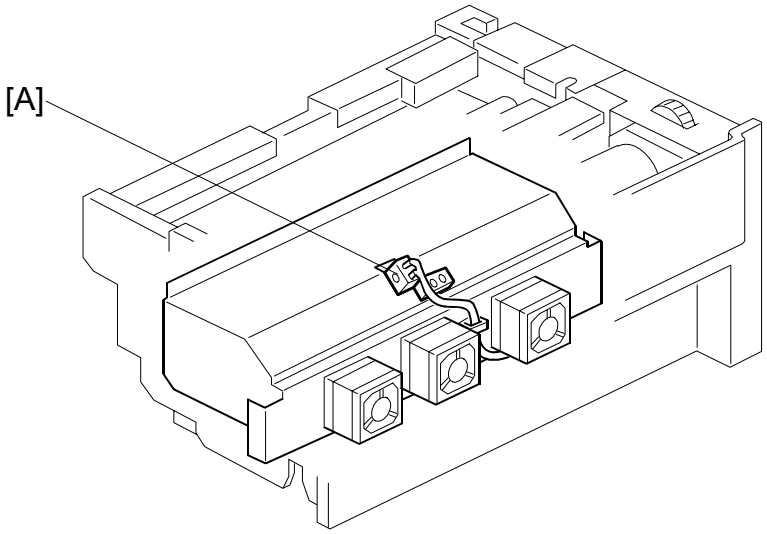

If the master buffer duct is blocked by a broken piece of master, suction from the fans may be insufficient. To prevent this, if the master duct sensor [A] detects a master when there should be none there, the machine detects that there is a broken piece of master in the duct, and a caution is shown on the display.

Opening the Door for Misfed Master Removal

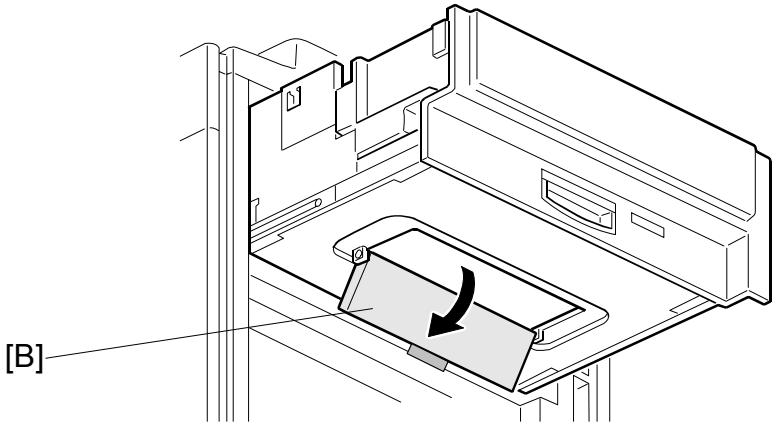

If pieces of the master remain in the master buffer duct, open the door [B] to remove them. Normally, pieces of master do not remain in the duct. Therefore, the door is only for emergency cases.

Also there is a jam removal dial to manually rotate the master feed rollers.

6.6.5 MASTER MAKING UNIT SET MECHANISM

Master Making Unit Slide-out Mechanism

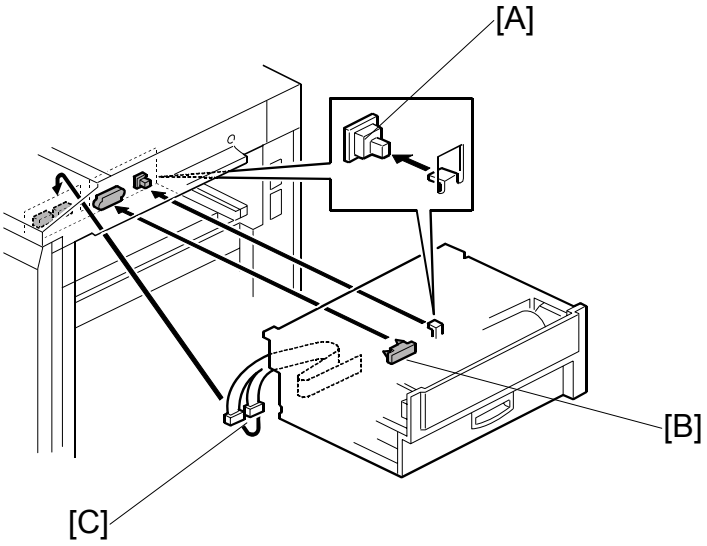

The master making unit can be slid out along the guide rails.

There are one drawer connector [B] and two cable connectors [C]

The master making unit set sensor [A] (a push switch) detects when the unit is out. The operation panel displays a message in this case.

Master Making Unit Lock Mechanism

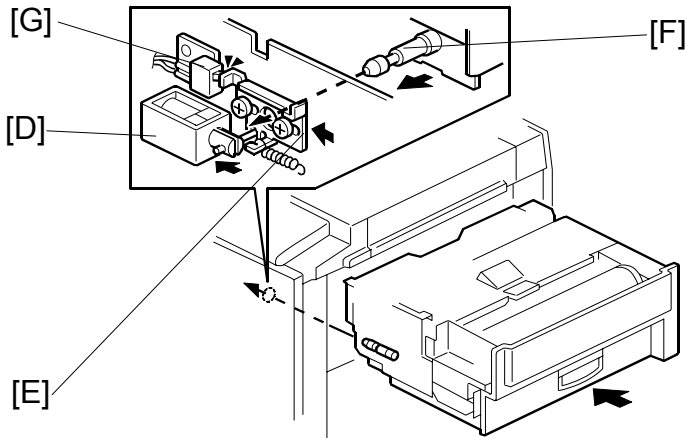

During master making or master feeding, the master making unit lock solenoid [D] moves the lock [E] and holds a pin [F] on the master making unit.

The master making unit lock detector [G] detects when the mechanism is locked.

This mechanism prevents the user from pulling out the master making unit during master making or master feeding.

6.6.6 MASTER JAM, CUTTER ERROR, AND CLAMP ERROR DETECTION

Master set error and misfeed

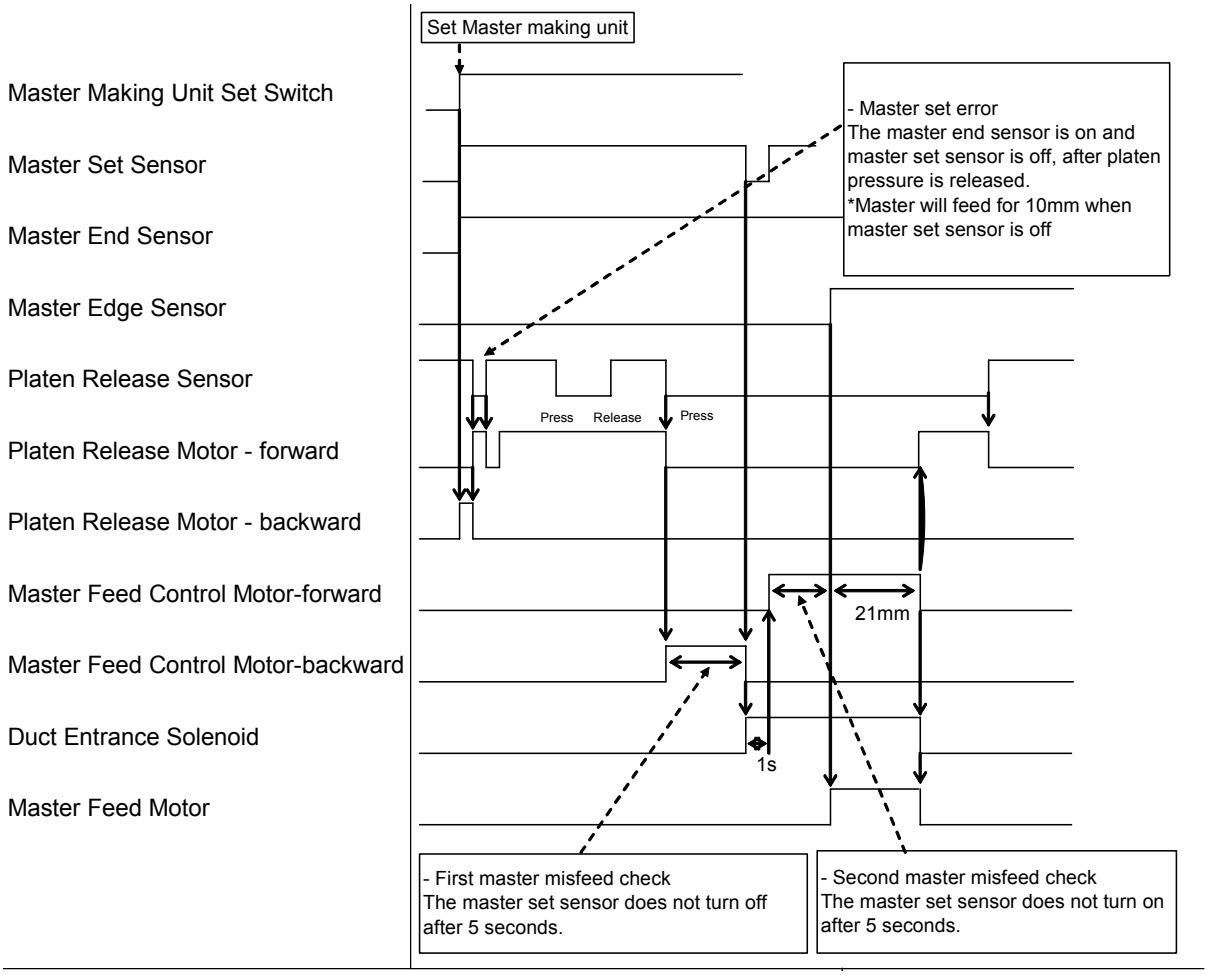

The machine detects a master with the master end and set sensors when a master making unit is put in the machine. If there is a master roll in the master making unit, the master is fed to the master making ready position. During this movement, the master edge sensor checks for a jam. The same jam detection when preparing for the next master making.

Master cut error

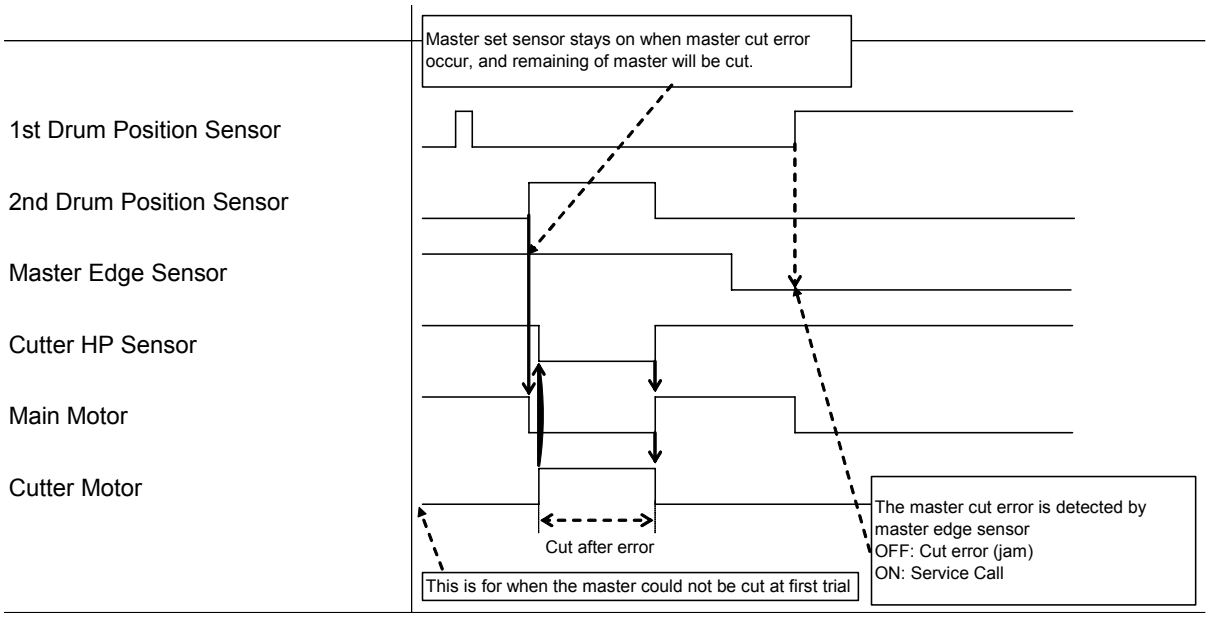

SC 300 (Main motor lock) occurs if the master is not cut after several attempts after master making.

Master clamp error

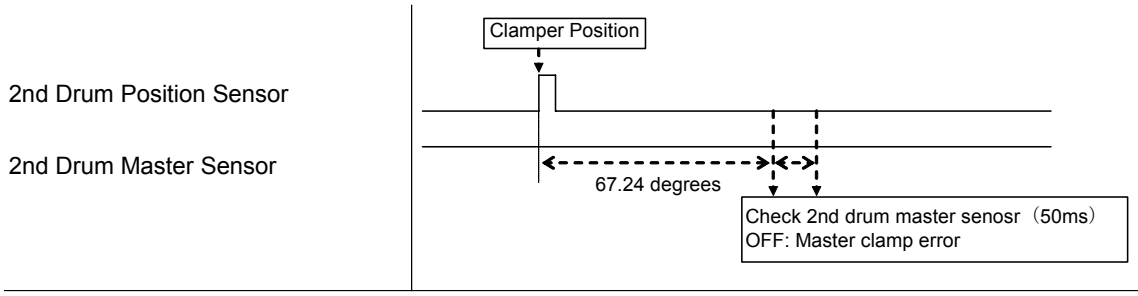

The drum master sensor detects if the drum clamper has clamped the master.

6.7 DRUM

6.7.1 OVERVIEW

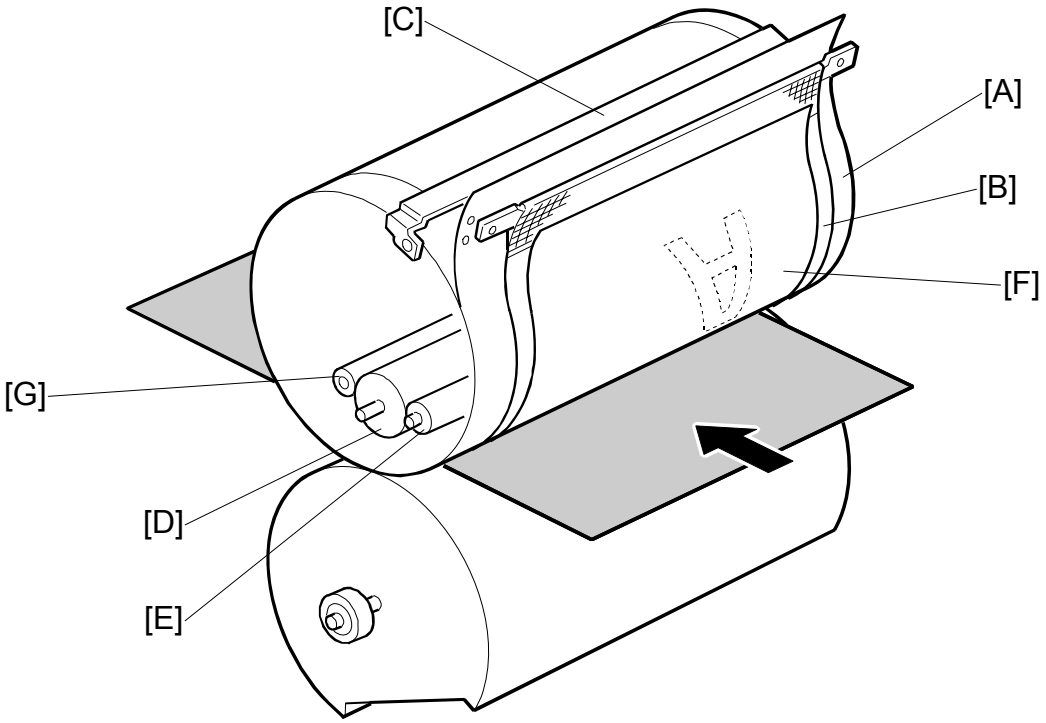

The drum surface is composed of a stainless-steel screen (metal screen [A]) and a three-layer polyester screen (cloth screen [B]). In addition, a drum master clamper [C] clamps the leading edge of the master wrapped around the drum.

Inside the drum are the ink roller [D] and doctor roller [E], which create a precisely maintained gap, known as the doctor gap, to supply a thin layer of ink on the screens and master [F].

This machine uses the drum idling roller [G] to supply ink onto the screens and master before printing. The length of time the machine was not in use determines the idling supply time. This ensures that the first print will have sufficient ink density even after the machine was not used for a long time.

This machine does not have a quality blade. This is because the properties of the ink used with this model are different, and the blade is not necessary.

6.7.2 INK SUPPLY AND KNEADING MECHANISM

Ink Cartridge Installation

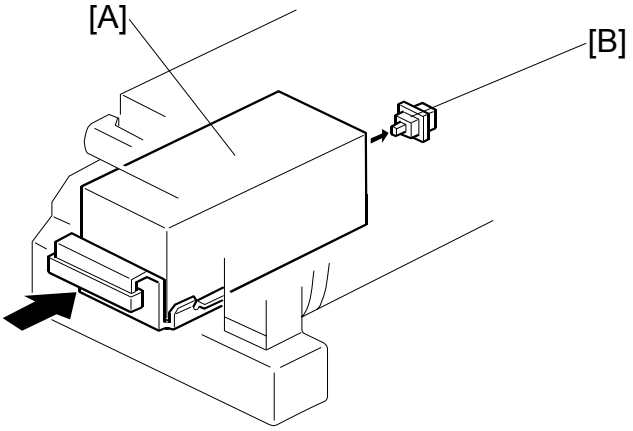

The ink cartridge [A] is in the drum. The ink cartridge set sensor [B] (a push switch) detects the presence of the ink cartridge.

Ink Supply Mechanism

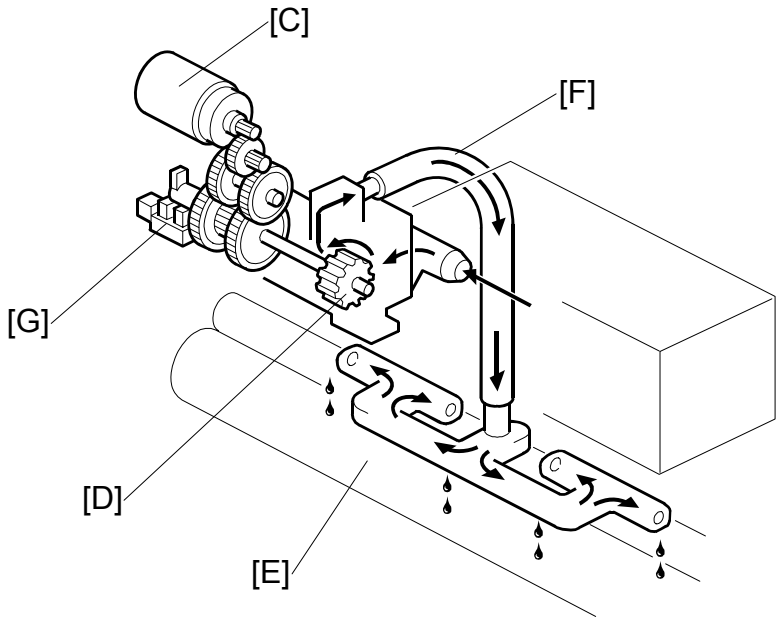

The ink supply mechanism is completely inside the drum. The ink pump motor [C] drives the ink pump [D], supplying ink from the ink cartridge to the ink roller [E] via the ink distributor [F].

Ink Pump Operation Monitoring

The ink pump sensor [G] monitors the number of rotations that the ink pump makes. The feeler on the shaft turns the sensor on at each complete turn of the shaft.

SP1-20-3 can be used to check the number of ink pump revolutions.

Ink Detection Board

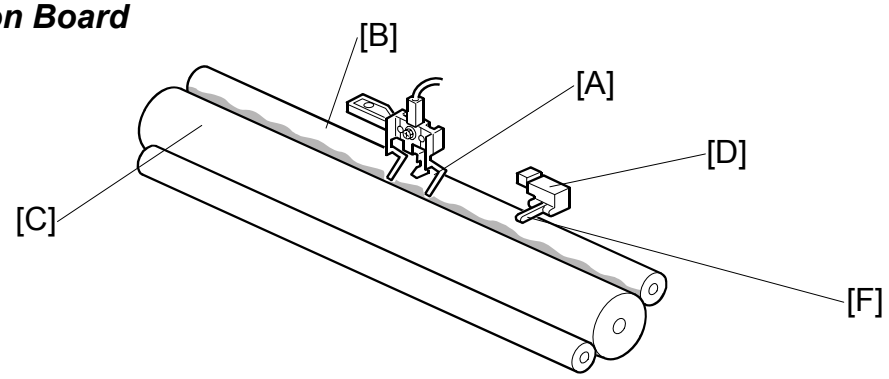

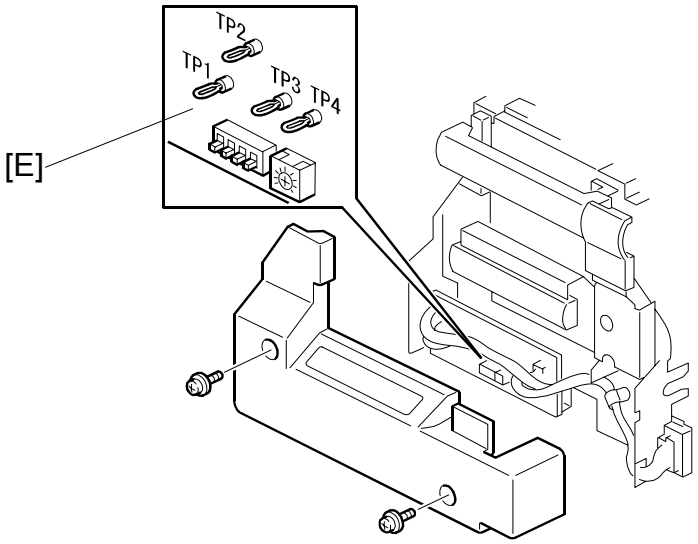

The ink detection pins [A] function as a capacitor electrode and detect the ink capacitance between the ink roller [B] and the doctor [C] rollers. The capacitance level changes with the ink level. When the ink level is high, the pins touch ink, and the capacitance increases. When the ink level is low, the pins do not touch the ink and the capacitance therefore decreases. Consequently, by detecting the capacitance between the pins, the ink supply motor maintains the ink level.

The display panel shows the remaining ink amount when the main switch is turned on, if the remaining amount of ink is less than half. The remaining ink is estimated from the number of revolutions of the ink pump. Because of this, when the user replaces the ink cartridge, the user should install a full cartridge, or this mechanism will not be reliable.

NOTE: User Tools – System Settings – Mode Setting – Master/Ink Remaining Volume must be “On”. The default is “Off”.

If the ink detection pins are defective, the ink flow detector [D] acts as a back-up to detect excess ink. This prevents excessive ink supply and ink overflow inside the drum. When too much ink is supplied, the pin [F] of the ink flow detector moves up, and this turns the sensor on.

When the ink pump motor turns on for more than 40 seconds, and ink still does not come to the drum, the machine detects that there is no ink in the ink cartridge and shows an ink end warning on the operation panel.

The ink detection board [E], which includes the ink detection circuit, is also inside the drum. There are test pins (TP's) and a potentiometer (VR901) for ink detection adjustment.

Drum Type Detection

There are also dip switches on the ink detection board (see the diagram at the top of the next page). To use these switches, you must remove a cover (2 screws). The settings depend on the drum type in the following manner:

DPS 901	-1	-2	-3	-4
Standard Drum A3/DLT	On	On	OFF	OFF
Color Drum A3/DLT	OFF	On	OFF	OFF
Option Drum A4	On	OFF	OFF	OFF
Not used	OFF	OFF	OFF	OFF

‘Standard’ means ‘Black ink’.

NOTE: 1) If the CPU detects that all dip switches are off, it assumes that there is no drum in the machine.
2) DIPSW-3 is used for C639. Please do not change the setting, or image problems will occur or an error will be displayed.
3) DIPSW-4 is not used.

Color Drum ID Detection

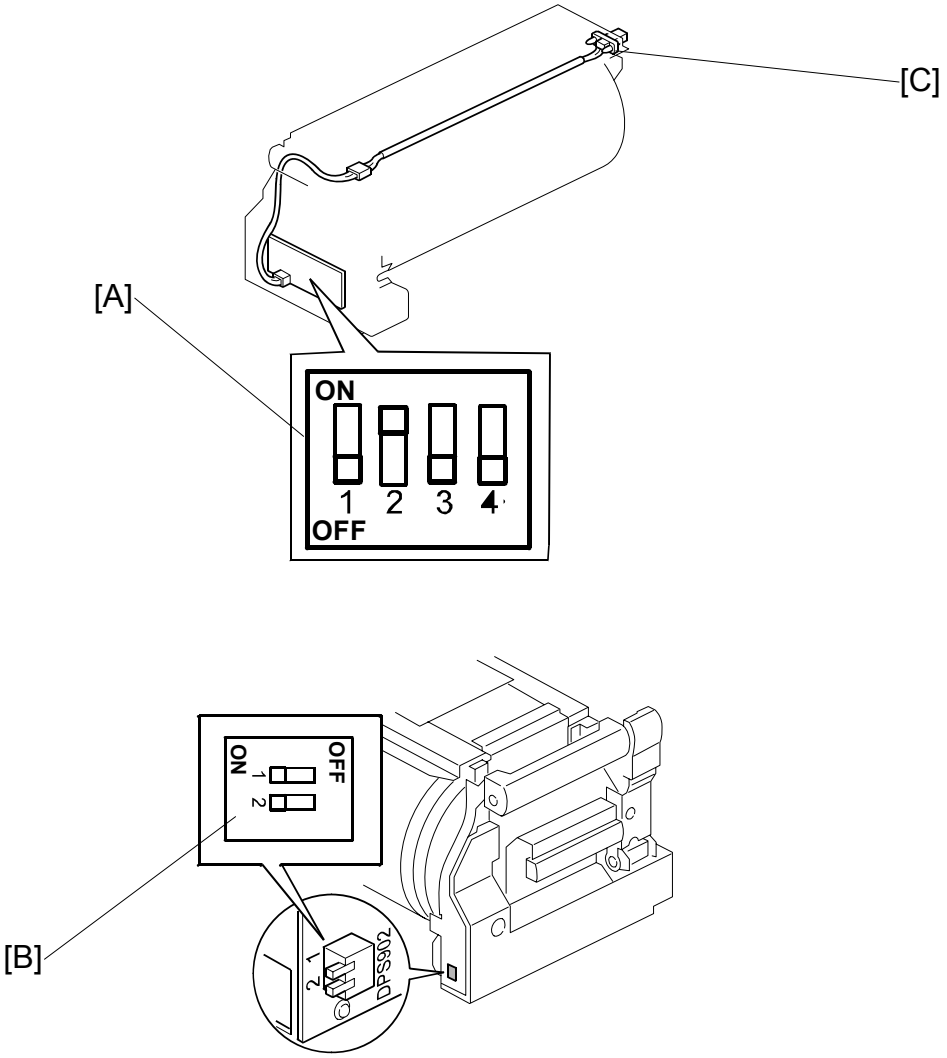

With dip switches and SP settings, the print counters for each color can be defined, and the color of the drum in the machine can be checked with a network utility.

When the drum type detection dip switch on the ink detection board [A] is set to 'color drum' (DIPSW 901-1 is off and 901-2 is on), then you can set the DPS902 dip switches [B] to specify the ID of the color.

The connecter [C] is for color drum ID detection and ink flow detection.

Four color IDs can be recognized. Note that this is not possible for A4 drums.

DPS902	-1	-2
ID0	OFF	OFF
ID1	ON	OFF
ID2	OFF	ON
ID3	ON	ON

Then, with SP 2-10-1 to –4, you can specify the meaning of each of these 4 ID codes.

- 2-10-1 specifies the meaning of ID0
- 2-10-2 specifies the meaning of ID1
- 2-10-3 specifies the meaning of ID2
- 2-10-4 specifies the meaning of ID3

There are 15 possible colors that can be specified with SP 2-10-1 to -4.

Allocation of color codes								
0	**1**	**2**	**3**	**4**	**5**	**6**	**7**	**8**
Other	Red	Blue	Green	Brown	Gray	Yellow	Purple	Maroon
9	**10**	**11**	**12**	**13**	**14**			
Navy	Orange	Teal	Red Base	Blue Base	Yellow Base			

Default: 0 (other)

For example, you install a drum with DPS 902-1 and -2 both set to OFF (this means 'ID0'). If this drum contains blue ink, then set SP 2-10-1 to 2 (blue). Then 'blue' will be shown on the display panel when this drum is installed.

The names in the above table are fixed in the software. So, for example, if the drum contains gold-coloured ink, the selected color should be 14 (yellow base).

Automatic Ink Supply for a New Drum

If the machine detects a new drum, ink is supplied automatically at the trial print for the first job with this drum.

The machine detects a new drum if:

- There is no master wrapped on the drum, and
- The ink detection pins detect no ink

The process is as follows.

1. Set an original.
2. Push the Start button.
3. The drum rotates.
4. The machine detects a new drum
5. Ink is supplied automatically.
6. If the machine detects the ink before 26 seconds, go to step 8.

   If the machine does not detect the ink before 26 seconds, go to step 7.
7. A blank master is wrapped around the drum, and the drum and pressure cylinder rotate, with pressure applied to the drum. Then the blank master is removed. Go to step 8.
8. Master making is started for the original that you set.

NOTE: There is also a manual ink supply procedure, like for previous machines.
"0" + "Economy Mode"
Procedure:
1. Press the "Master Making" key to light the Master Making indicator.
2. On the screen, push 'Make Master Options'.
3. Hold down the '0' key, and at the same time push 'Economy Mode Level 1' or 'Economy Mode Level 2'.

Ink Kneading Mechanism

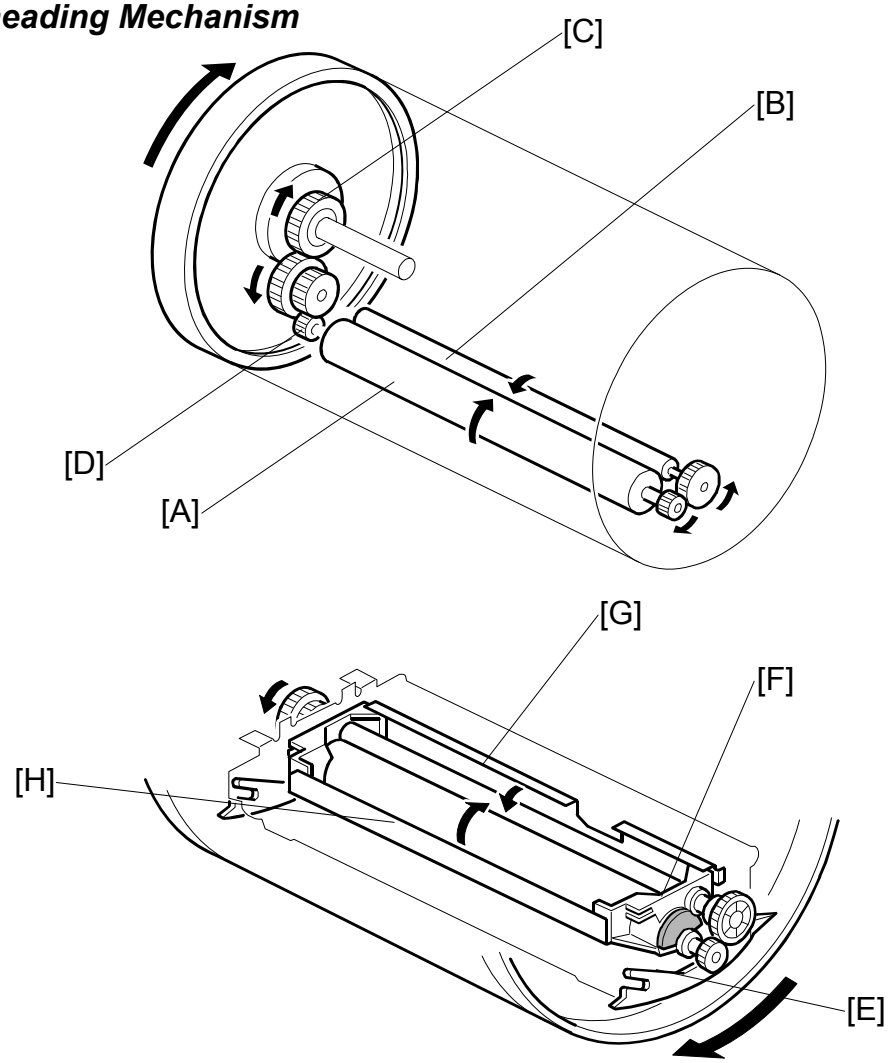

A gear [C] on the drum shaft drives the ink [A] and doctor [B] rollers. The doctor roller spreads the ink evenly on the ink roller. The ink roller drive gear [D] has a one-way clutch to prevent the ink roller from being manually turned in the reverse direction.

The ink roller only touches the screen during the printing process. During the printing process, ink passes to the paper through holes in the screens and the master. This is because the pressure cylinder below the drum holds the drum screen and the master against the ink roller during printing.

The ink roller blade [E] (white plastic) and separation plate [F] (white plastic) scrape off ink build-up on both ends of the ink and doctor rollers.

Metal plates [G] and [H] reduce the amount of ink leakage, if a leak occurs.

Drum Idling Mechanism

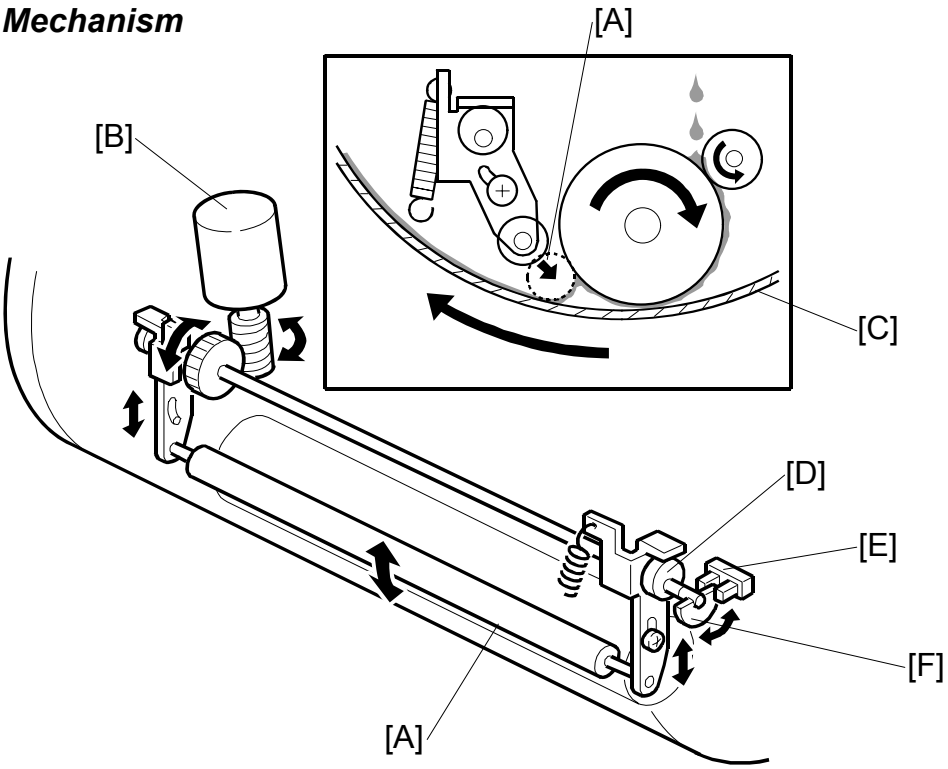

Quality Start Mode

In Quality Start mode, the machine enters the drum idling mode before printing. This ensures that the first print has sufficient ink density even if the machine was not used for a long time. When the machine is printing (Trial print, 1st print, 2nd print,.etc.), the drum idling roller is not used.

The user selects Quality Start mode by pressing a key on the operation panel. The number of idling rotations is fixed at 7. However, a user tool can change this number (User Tools – System Settings – Mode Settings – No of Idling Rotations: Quality Start).

NOTE: In Quality Start mode, the drum idling motion starts before printing, when the Start key is pressed. However, if there is no master on the drum, drum idling is not done.
Even if the Quality Start mode is active, and there is no master on the drum, drum idling is skipped although the LED on the operation panel turns on. When printing for the next original starts, the machine enters drum idling mode if a large enough master is wrapped around the drum (it will not be done for an A4 master on an A3 drum).

The drum idling roller [A] puts the ink onto the screen and master before printing. The idling roller motor [B] turns to press the drum idling roller against the inner surface of the drum screen [C]. A spring under tension supplies additional force for this.

The motor turns the cam [D], moving the drum idling roller into contact and away from the drum screen. The actuator disk [F] interrupts the idling roller HP sensor [E] when the drum idling roller is in contact with the drum screen.

Auto Quality Start Mode

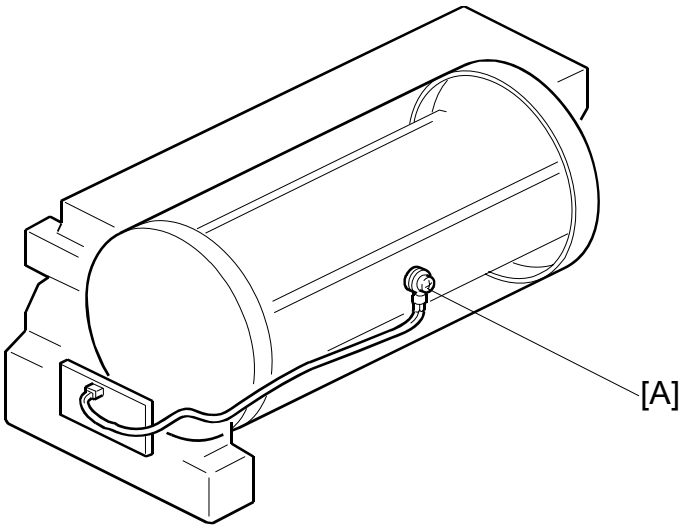

Auto Quality Start is done if the user does not select Quality Start mode. (Auto Quality Start can be disabled with a user tool: System Settings – Mode Setting – Auto Quality Start Setting).

In Auto Quality Start mode, the idling motion depends on how long the machine was not in use and on the temperature detected by the thermistor [A] in the drum.

The CPU detects a low temperature condition if the thermistor [A] reports approximately 19 °C or lower. If the detected temperature is 29 °C or higher, it is a high temperature condition.

The number of drum idling rotations depends on temperature and period of machine inactivity, as shown in the following table.

A user tool can change the number of rotations for each of these conditions (System Settings – Mode Setting – No of Idling Rotations: Auto Quality Start).

Period/ Temperature	Less than 4 hours	4 to 24 hours	24 to 72 hours	Over 72 hours
High (29 °C or higher)	0	5	5	5
Normal (19 to 29 °C)	0	5	5	5
Low (19 °C or lower)	0	7	7	7

NOTE: The drum rotation speed during idling is fixed at 16 rpm.

Drum Rotation Speed during Printing

The drum rotation speed varies during printing as shown in the table below.

- Change of drum rotation speed (rpm) with temperature -

Temperature	Trial Print	1st Print	2nd Print	3rd Print	4th Print	5th Print	6th Print	7th Print
High (29 °C or higher)	16	90	105	120	135	135	135	135
Normal (19 to 29 °C)	16	75	90	105	120	135	135	135
Low (19 °C or lower)	16	30	60	75	90	105	120	135

NOTE: These figures apply to the highest printing speed (speed 6, which is at 135 rpm).

6.7.3 DRUM SHIFT MECHANISM FOR IMAGE SIDE-TO-SIDE SHIFT

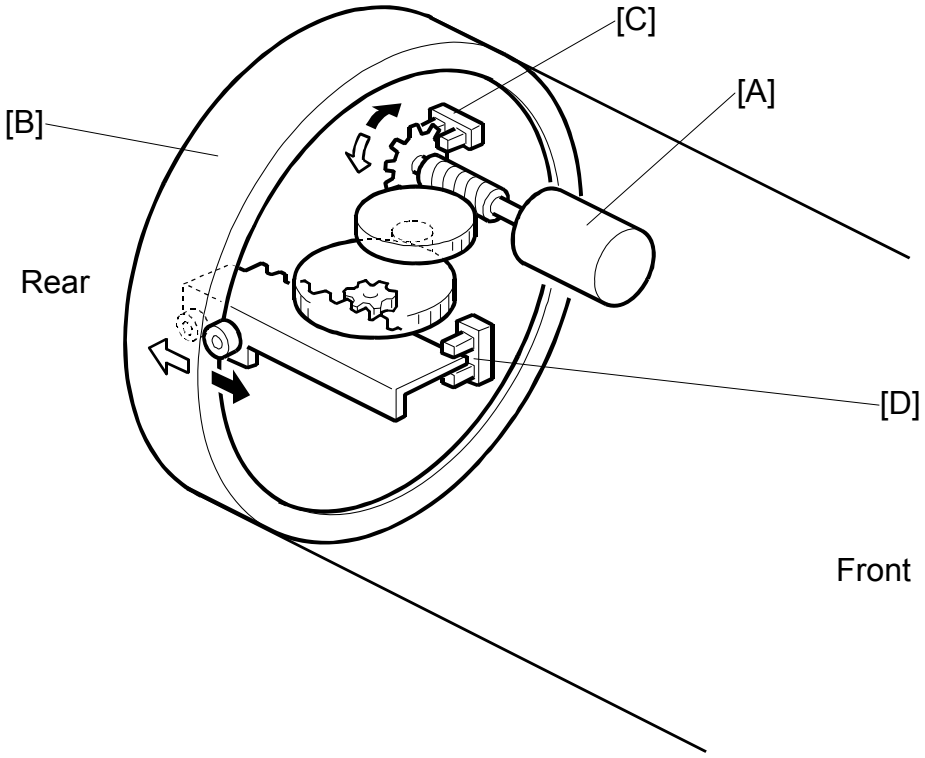

The image side-to-side shift function shifts the outer drum sleeve (with master) from front to back.

The shifting mechanism is inside the drum. It consists of the drum shift motor [A] and a rack and pinion mechanism.

The motor can turn in either direction by the image shift amount set at the operation panel. The motor moves the rear drum flange [B] via the rack and pinion, as shown. At the same time, it rotates the pulse disk. This allows the drum shift sensor [C] to generate pulse signals for sending to the CPU. The CPU detects the amount of shift with these signals and controls motor on/off time.

The maximum shift range, in both directions, is 10 mm from home position. The drum shift HP sensor [D] ensures that the outer drum sleeve returns to the home position.

When the outer sleeve returns to the home position, it activates the sensor, stopping the drum shift motor.

6.7.4 DRUM SET MECHANISM

Upper Handle and Lock

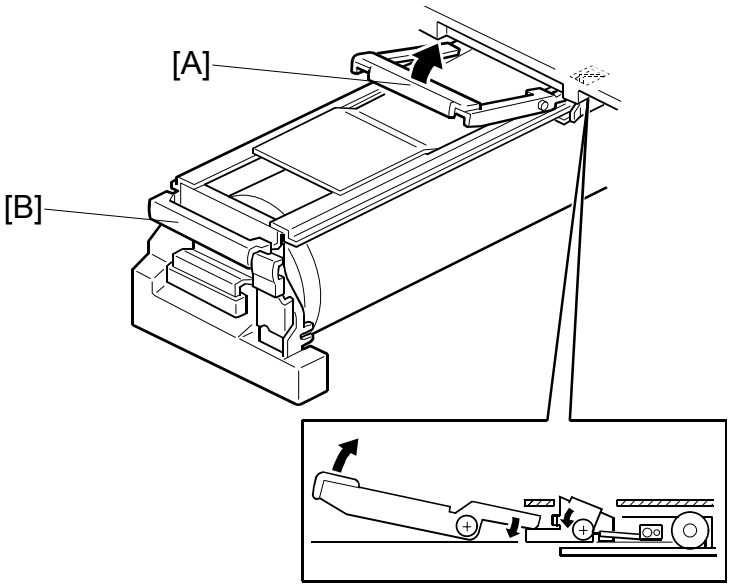

There are two grips [A, and B] to hold the drum.

When the upper grip [A] is pulled up, it releases the drum locking mechanism.

Front Lock Lever

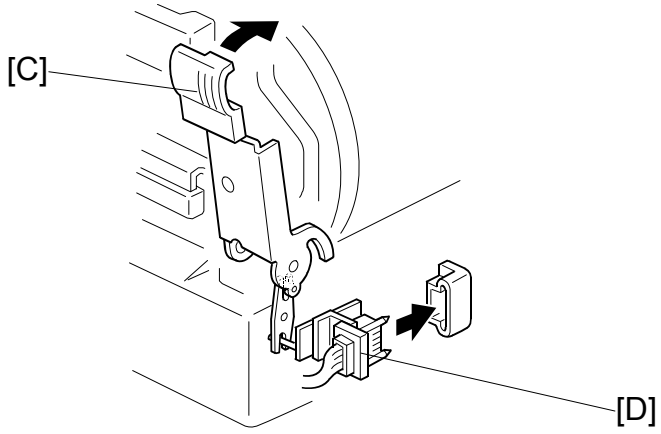

When the drum is set correctly and the front lever [C] is raised, the drum is locked into position. The connector [D] allows electrical contact for the drum components.

Drum Rotation Lock Mechanism

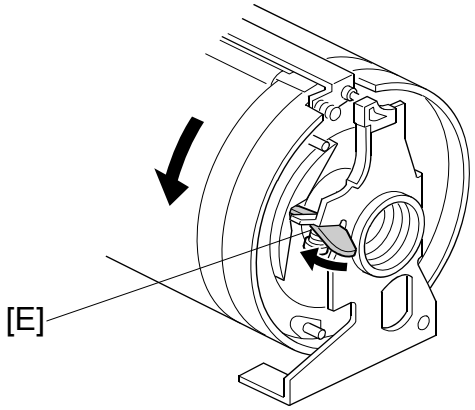

The rotation stopper [E] prevents the drum from turning when it is removed from the machine.

When the drum is replaced, contact with the rear frame disengages the stopper [E] and releases the lock.

6.7.5 DRUM DRIVE MECHANISM

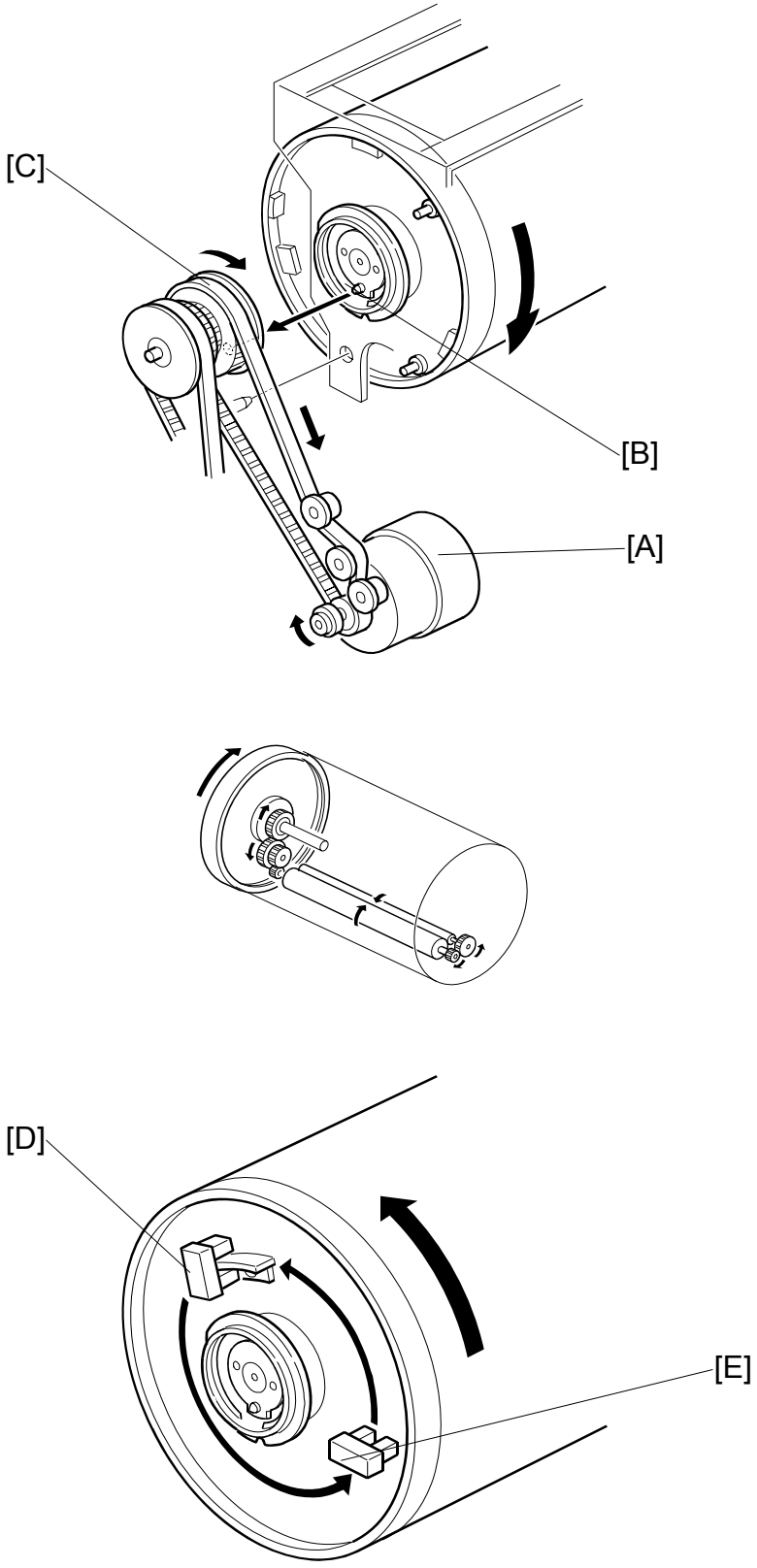

The main motor [A] drives the drum via the timing belt. When the drum is set in the machine, the drum drive pin [B] on the joint disk engages the drum drive gear [C]. This transmits the main motor drive to the drum unit.

The main motor [C] contains an encoder to send pulses to the main motor control board. The CPU monitors the pulses and controls the drum speed and stop positions. The 1st and 2nd drum position sensors [D, E] check the position of the drum. The actuator on the rear drum flange activates these sensors as the drum turns.

There are three drum stop positions: home, master eject, and master making. The CPU starts counting the main motor encoder pulses when these sensors are activated. Certain pulse counts are assigned to each drum stop position. The CPU can stop the drum at the desired positions.

At the home and master making positions, the drum de-actuates the relevant sensor. This ensures that the drum stops in the exact position, even after high-speed rotation. The 1st drum position sensor corresponds to the home position and the 2nd drum position sensor corresponds to the master making position.

6.7.6 MASTER DETECTION

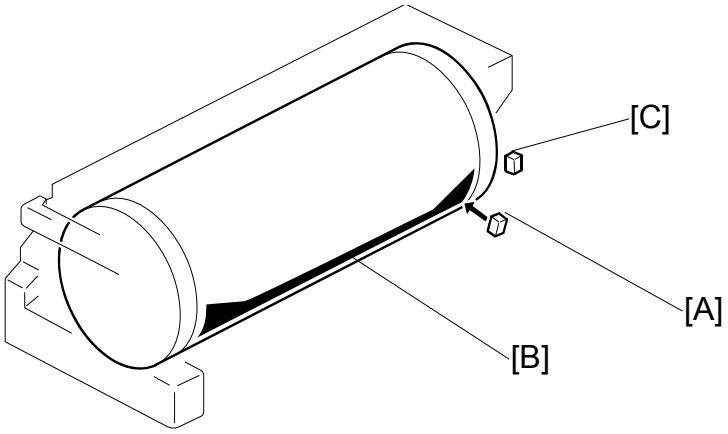

The 1st drum master sensor [A] detects a master on the drum.

If a master is on the drum, the black patch [B] is covered and the sensor detects the light reflected from the master. Printing starts when the start key is pressed. If an original has been set, the old master is ejected from the drum before making a new master.

If no master is on the drum, the black patch is exposed. The black patch does not reflect light back to the sensor. The machine will skip the master eject process and immediately begin making a new master.

A similar sensor, the 2nd drum master sensor [C], is located just above the 1st drum master sensor. This sensor determines if the master making process correctly wrapped the master around the drum.

The drum starts turning soon after the drum master clamper clamps the leading edge of the master. The 2nd drum master sensor checks for the presence of the master (master clamping error check). If a master is not detected, a clamping error occurred. The master feed stops, the drum returns to the home position, and the machine displays a master feed jam message.

The 1st drum master sensor cannot check for master clamping errors, because the black patch has moved.

Both sensors use the same black patch [B] to detect the master.

NOTE: In this model, the black patch on the drum is larger.
The patch ensures that the master pick-up roller in the master eject roller unit contacts the drum surface evenly at this part of the drum, resulting in even pressure from the roller all across the drum.

6.7.7 DRUM HOME POSITION DETECTION

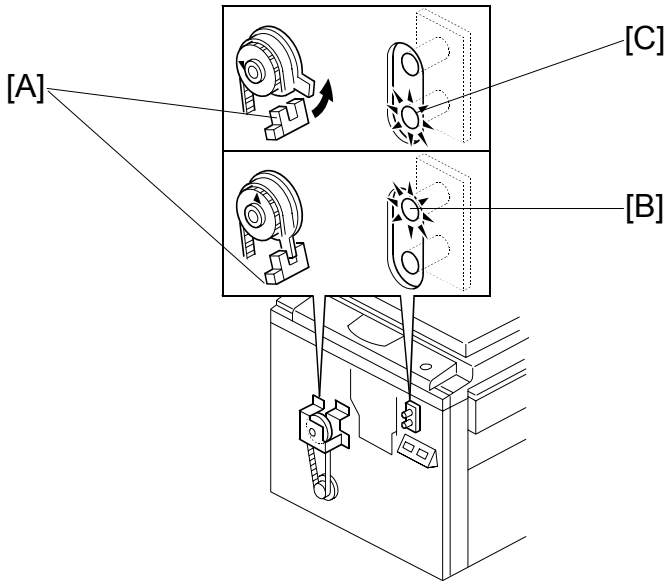

LEDs inform the operator when the drum is at the exact home position and can be pulled out. The drum home position is monitored by the drum home position sensor [A].

Green LED [B] turns on when the drum is at the home position.

Red LED [C] warns that the drum is not at the home position.

NOTE: 1) If the red LED lights, the drum is not at the home position and the front door must be closed to reset the drum position.
2) When the machine is in standby mode, both LEDs are OFF.

6.8 PAPER FEED

6.8.1 OVERVIEW

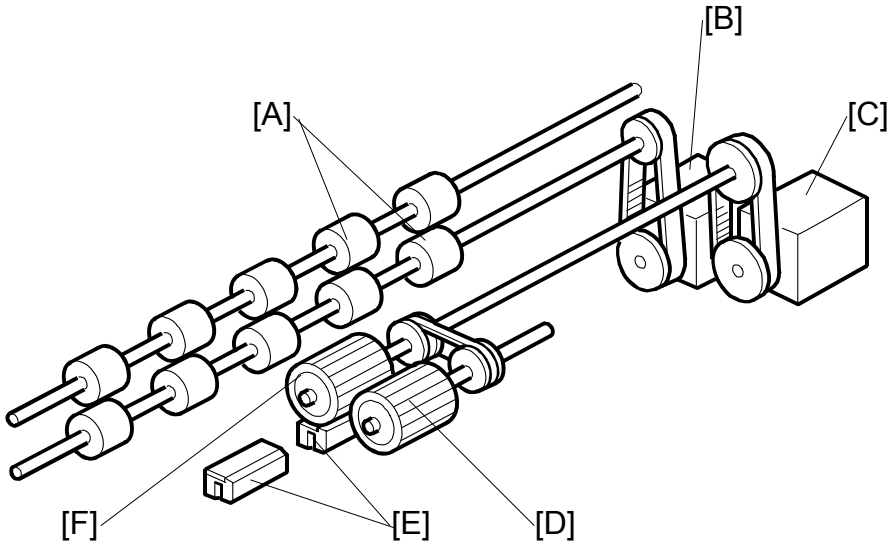

Feed and Separation

The top sheet of paper on the paper table is first fed by the pick-up roller [D]. Then, it is separated by the feed roller [F] and the friction pad [E], and fed to the registration rollers [A]. The upper and lower registration rollers feed the sheet to the drum.

An independent stepper motor (the paper feed motor [C]) drives the paper feed roller and paper pick-up roller. This allows more precise control than the usual main motor/magnetic clutch system.

Feed/Separation Pressure

The strength of the paper feed roller and the friction pad pressure against the paper depend on the paper type selected at the operation panel. Each component has a separate dc motor to adjust the pressure. The operator is free from complicated adjustments for paper feed and separation pressures.

There are two friction pads [E]. The machine automatically selects the correct one for the paper type that is set by the user.

Registration

Also, an independent stepper motor (the registration motor [B]) controls the registration roller. The registration roller synchronizes paper feed timing with the image on the drum. The registration roller starts rotating after the paper has come in contact with the rollers and has been aligned.

Paper feed timing around the registration roller is monitored by two different photo-sensors. One is located before the registration roller, and the other is after the registration roller. These sensors are also essential for paper feed control.

6.8.2 PAPER FEED MECHANISM

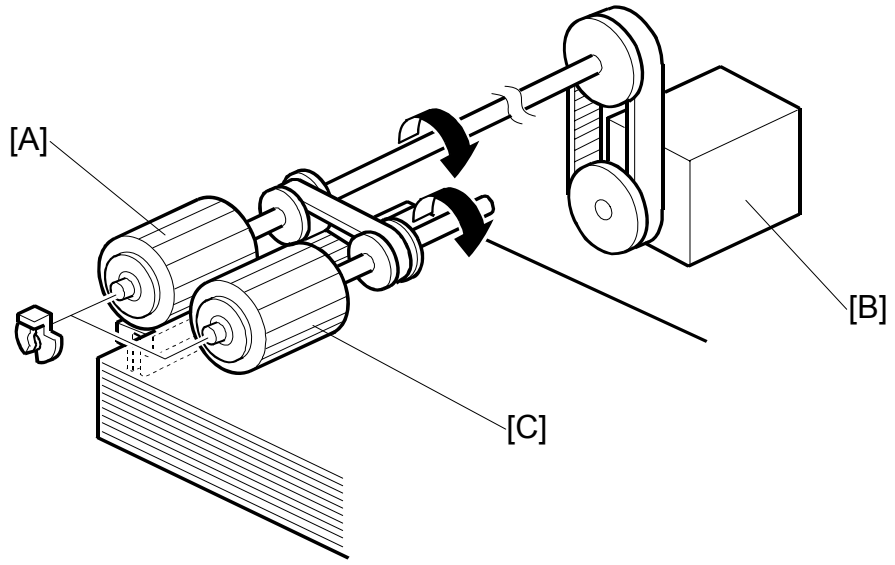

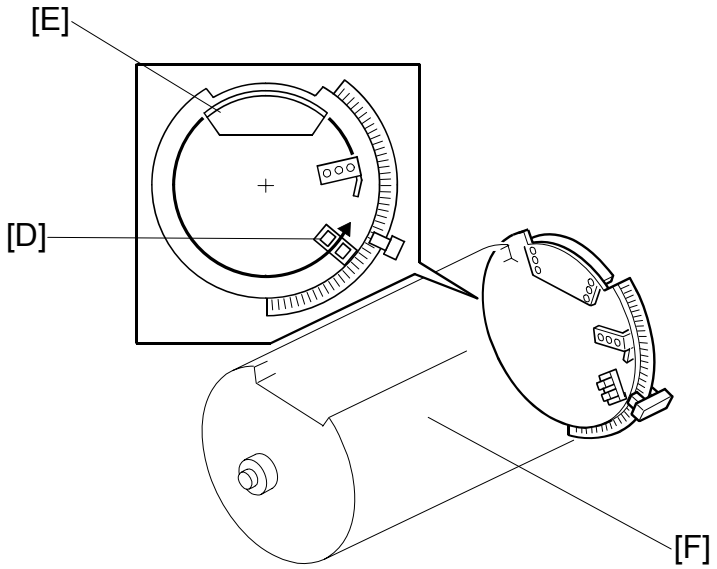

The paper feed motor [B] drives the paper pick-up roller [C] and the paper feed roller [A]. There is a one-way clutch in the paper feed roller. When the roller stops and paper is fed by the registration rollers, the one-way clutch ensures that the paper feed roller does not resist the paper feed.

To prevent a paper misfeed, the feed speeds are changed to match the printing speed.

Since paper feed timing must be synchronized with pressure cylinder rotation (so that the paper clamper on the pressure cylinder can catch paper's leading edge accurately), the paper feed motor on timing is maintained by the feed start sensor [D].

A short time after the pressure cylinder [F] starts rotating, the actuator [E] on the rear of the pressure cylinder activates the sensor.

6.8.3 PAPER FEED/SEPARATION PRESSURE ADJUSTMENT MECHANISM

Paper feed pressure

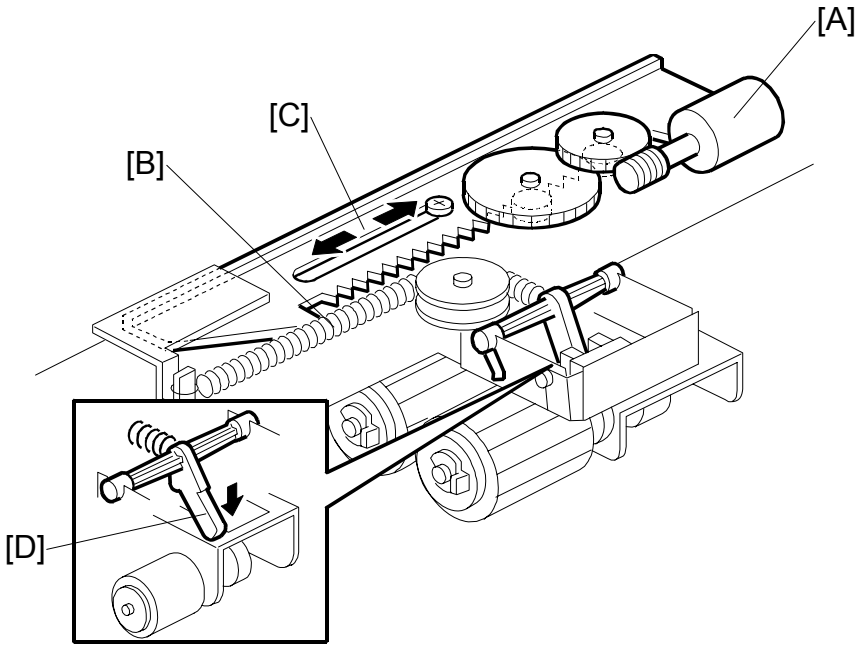

The feed pressure motor [A] rotates, pulling or releasing the spring [B] through the rack [C]. The lever [D] moves up or down depending on the tension of the spring. If the spring is pulled, the lever moves upwards, reducing the paper feed pressure.

The position of the rack [C] is detected by the feed pressure detection board (not shown).

Paper separation pressure

The paper separation pressure, the paper feed pressure and the friction pad that is used for separation depends on the paper type selected at the operation panel. When the paper type is changed, the three motors automatically turn to change the pressure settings and friction pad block.

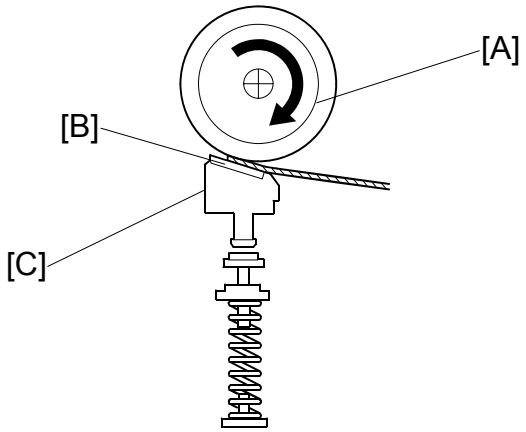

The top sheet of the paper is separated from the paper stack by the friction between the paper feed roller [A] and the friction pad [B], and fed to the registration roller.

The friction pad [B] is mounted on a block [C], and spring pressure is applied to this block. As explained later, the spring pressure is changed by a dc motor to adjust the paper separation pressure.

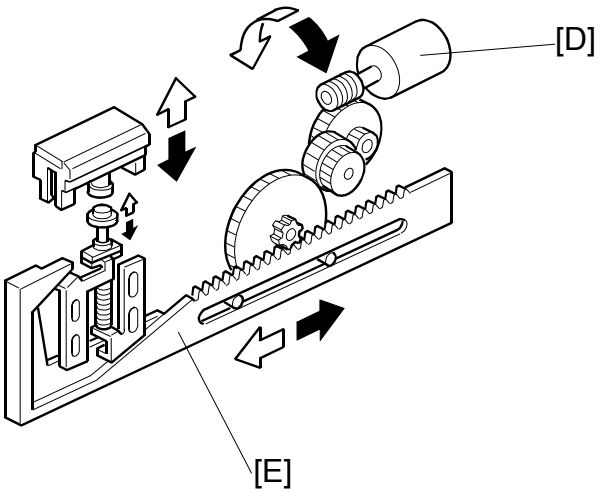

The direction of paper separation pressure motor [D] rotation depends on the signal from the CPU. The rack [E] moves from side to side, moving the friction pad base up or down. This changes the spring pressure against the friction pad block.

Friction Pad Exchange Mechanism

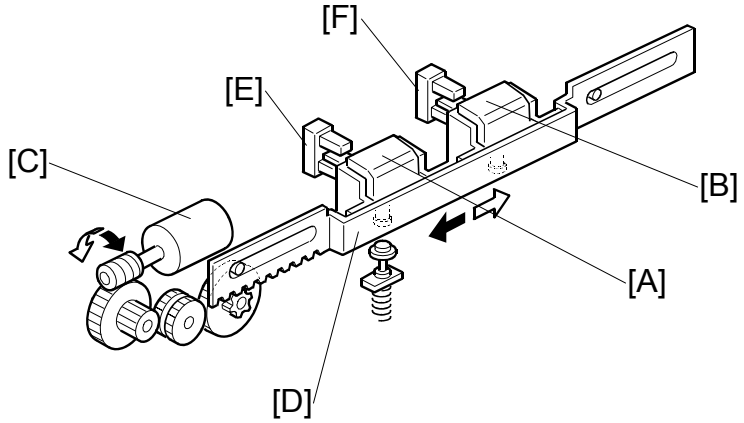

The friction pad ([A] or [B]) that is used depends on the paper type setting, and the settings of SP 6-011.

To use the normal pad [A], the friction pad shift motor [C] drives the rack [D]. When friction pad position sensors 1 [E] and 2 [F] are both actuated, the friction pad shift motor stops.

To use the custom pad [B], the friction pad shift motor [C] drives the rack [D]. When only friction pad position sensor 1 is actuated, the friction pad shift motor stops.

Paper Types

The user can select the paper type before starting the job. The feed and separation pressures used for the job will depend on the selected paper type (the machine automatically adjusts these pressures to suit the selected paper type).

The possible paper type settings are standard, thick, thin and special. Two additional settings for paper types can be customized as 'user 1' and 'user 2'.

For the 'user 1' and 'user 2' paper types, the user can choose from six settings using a user tool (System Settings – Mode Setting – Paper Type: User 1-2). The user tool settings give the machine a rough idea of what type of paper the user is using as types User 1 and User 2. The six user tool settings are as follows.

- Standard, no feed (Standard paper type, non feed likely)
- Standard, double feed (Standard paper type, double feed likely)
- Thick, no feed (Thick paper type, non feed likely)
- Thick, double feed (Thick paper type, double feed likely)
- Thick, medium (Thick paper type, with intermediate chances of double and non-feed)
- Thin, very thin (Thin paper type, non feed likely)

Pressure Settings for Each Paper Type

For each of these paper types (standard, thick, thin, special, user 1, user 2), the user has two settings: ‘Misfeed’ and ‘Double Feed’. Each of these two settings has three possible values: Standard, Sometimes, Frequently (the user selects one of these depending on how the machine is performing).

The pressures for each setting can be adjusted with SP mode (SP 6-9 ‘Misfeed – Paper Feed Pressure’ and SP6-10 ‘Double feed – Separation Press’).

- SP 6-9 adjusts the feed pressures that are applied for each of the user’s three possible ‘misfeed’ settings for each paper type.
- SP 6-10 adjusts the separation pressures that are applied for each of the user’s three possible ‘double feed’ settings for each paper type.

Other Factors affected by the selected Paper Type

The paper type selected for a job also affects the paper delivery wing position, and whether the paper clamper on the pressure cylinder is used or not.

- SP6-11: Friction pad type for standard, special, thick, thin, user 1, and user 2 type paper
- SP6-12: Paper clamp enable/disable for standard, special, thick, thin, user 1, and user 2 type paper
- SP6-13: Paper delivery wing position for standard, special, thick, thin, user 1, and user 2 type paper

Default Settings

The following table shows the default settings for each paper type. For the pressure, the higher the SP mode value, the higher the pressure.

	Feed pressure: Jam Occurrence			Separation pressure: Jam Occurrence			Wing Guides	Paper Clamp
Paper Type	**Very few**	**Some-times**	**Frequ-ently**	**Very few**	**Some-times**	**Frequ-ently**		
Standard	3	5	6	3	5	6	Up	Yes
Thick	4	5	6	0	2	4	Down	Yes
Special	3	4	5	0	2	4	Down	Yes
Thin	1	3	5	2	4	6	Up	Yes
User 1	4	5	6	2	4	6	Up	Yes
User 2	4	5	6	2	4	6	Up	Yes

For details about the paper clamper, see ‘Pressure Cylinder’. For details about the wing guides, see ‘Paper Delivery’.

When the temperature is 19 ºC or lower (detected by the drum thermistor), the value of the pressure is automatically increased by 1 for standard paper and thick paper. This is done for both feed pressure and separation pressure. For this feature to operate, the following SPs must be set to ‘ON’ (the default is ‘ON’).

- SP6-10-19: Normal Paper - Low Temperature Mode
- SP6-10-20: Thick Paper - Low Temperature Mode

6.8.4 PAPER REGISTRATION MECHANISM

Registration Roller Drive

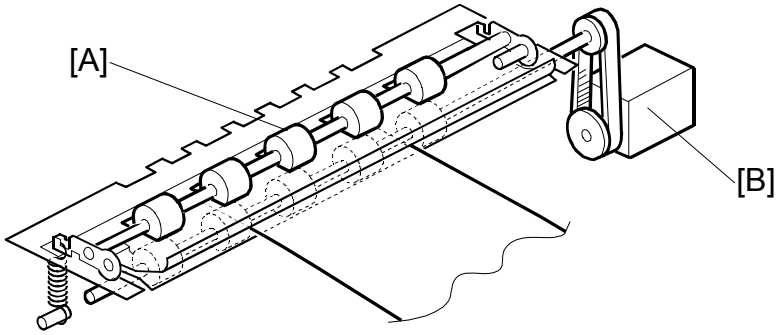

The lower registration roller [A] is driven by the registration motor [B] (stepper motor). When the paper comes into contact with the rollers, the motor remains stopped to create a buckle in the paper to obtain precise paper registration and to prevent paper skew.

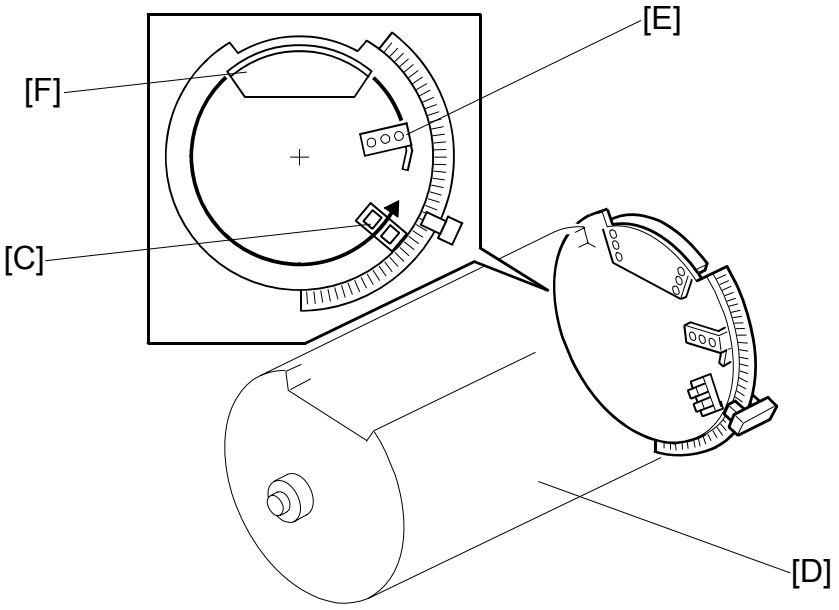

Paper feed timing must be synchronized with the pressure cylinder rotation, so the registration motor on timing is maintained by the feed start sensor [C].

A short time after the pressure cylinder [D] starts rotating, the actuator [E] on the rear of the pressure cylinder activates the sensor. A pre-determined duration later, the registration motor starts turning to feed paper to the drum and pressure cylinder. After the printing paper is caught between the drum and the pressure cylinder, the registration motor stops.

NOTE: 1) The registration motor rotation speed is constant. However, when the operator selects a higher or lower printing speed (to change the copy image density), the drum and pressure cylinder rotation speed changes. The registration motor must feed the paper at the correct time for the leading edge to be caught by the paper clamper on the pressure cylinder. Therefore, the registration motor start timing after the paper feed start sensor is activated depends on the printing speed selected.

2) There are two actuators: [E] and [F]. The actuator [F] is used to maintain the paper feed motor start timing. (This was mentioned earlier, in 'Paper Feed Mechanism'.)

Image Up/Down Shift Mode

In addition, the registration motor start timing is changed by pressing the image position keys on the operation panel (this is the image up/down shifting mode). If the paper feed timing is delayed, the image is shifted forward.

NOTE: The leading edge of the paper must be precisely caught by the paper clamper on the pressure cylinder after leaving the registration rollers. When the image up/down shifting mode is used, the position of the pressure cylinder changes through the image up/down mechanism, so the registration motor start timing must change. (The drum stays at home position.) For details of the mechanism, refer to "5.12 Image Up/Down Shifting".

Registration Roller Up/Down Mechanism

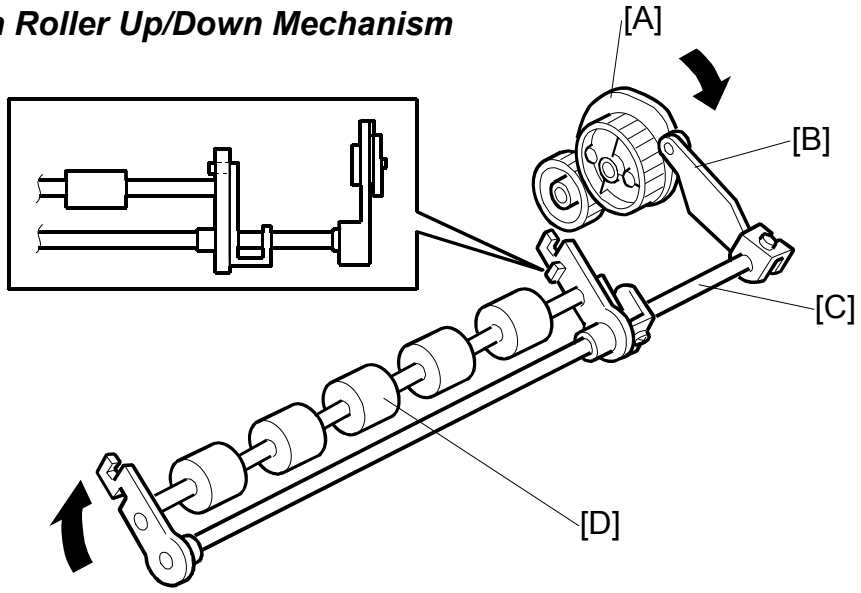

After the paper is caught by the paper clamper and is between the drum and the pressure cylinder, the upper registration roller is released from the lower registration roller. This is to prevent interference from the registration rollers while the paper is being fed by the drum and the pressure cylinder.

When the high point of the cam [A] on the drum drive gear reaches the cam follower [B] (a bearing), the shaft [C] rotates clockwise (as seen from the operation side) to release the upper registration roller [D] from the lower registration roller.

6.8.5 PAPER FEED CONTROL MECHANISM

Registration Roller

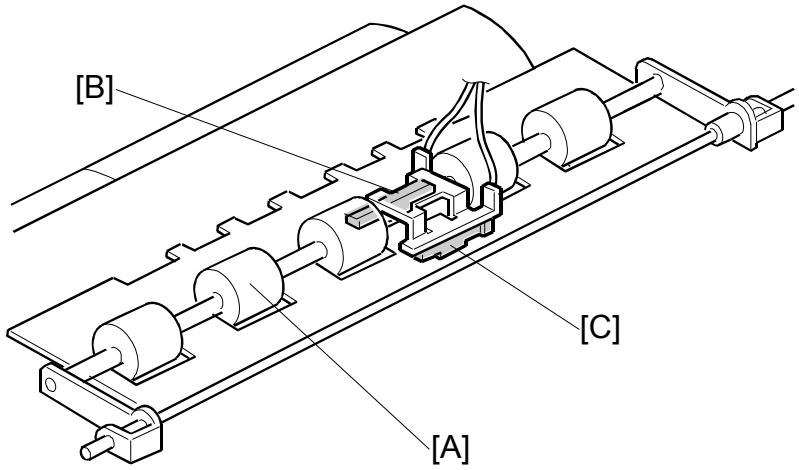

The paper feed timing around the registration roller [A] is monitored by two different photo-sensors. The first is the paper registration sensor [C], which is located before the registration roller. The second sensor is the paper feed timing sensor [B], which is located after the registration roller.

The paper registration sensor [C] detects the paper arriving at the registration roller. The paper feed motor start timing is determined by this sensor. When the paper comes into contact with the rollers, the motor remains stopped to create a buckle in the paper to obtain precise paper registration and to prevent paper skew. The motor starts turning a pre-determined period after the sensor is activated by the paper. The sensor is also used to detect jams.

Paper Slip Correction

The paper feed timing sensor [B] is also used to detect paper jams. It is also used to compensate for delays in paper feed caused by slippage at the registration roller.

The CPU monitors the paper feed timing sensor after the registration motor starts turning. If the sensor turns on late, the CPU determines that there has been slippage at the registration roller. Depending on the size of the delay, the registration motor speeds up to recover the delay.

Feed Speed Correction

The speed of the pressure cylinder rotation depends on the speed of printing. The paper is fed 1.4 times faster than the pressure cylinder rotation. When the paper clamper is closing, the paper catches up with the pressure cylinder, and slows down to the same speed as the pressure cylinder.

6.8.6 PAPER FEED RETRY MECHANISM

When paper is misfed at the paper feed tray, a paper feed jam is not displayed, and the machine tries to feed the paper again.

The paper registration sensor does not turn on after the paper feed motor turns, and the pressure cylinder turns without paper. Then, when the feed start sensor is on again, the paper feed motor starts to feed again.

The paper feed retry mechanism only operates during printing, and not for the trial print.

The retry is done only one time. If paper is not fed, then a misfeed occurs.

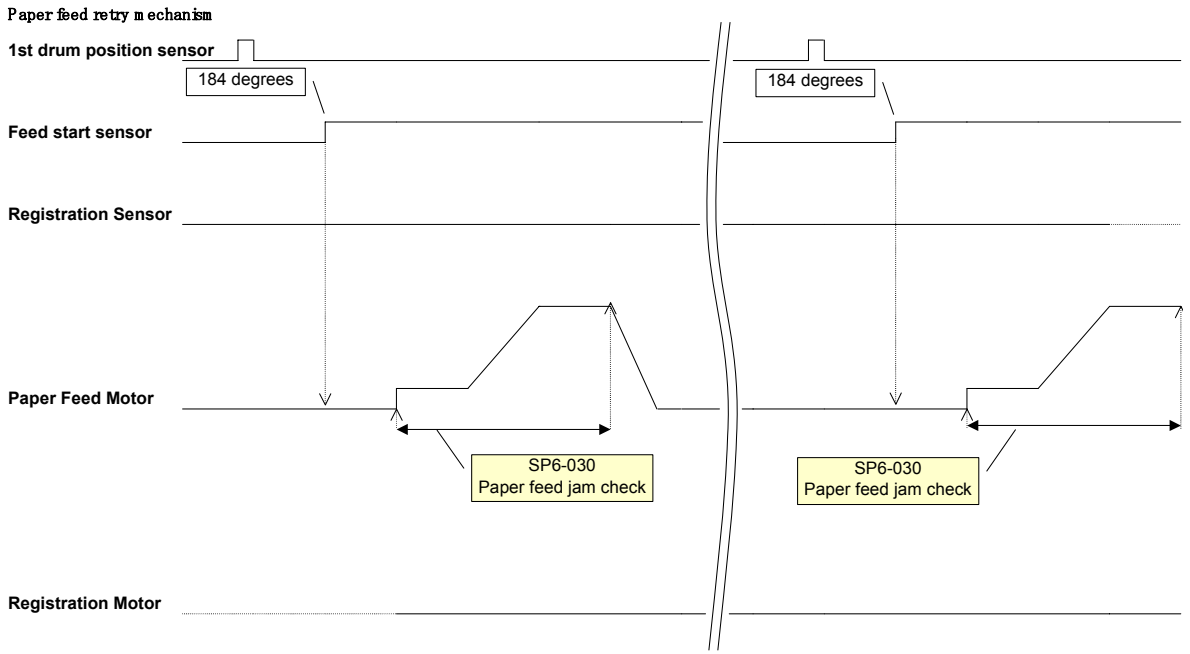

First try: When the registration sensor does not turn on, the paper feed motor will stop. Then 'A jam' will not display and the drum will be rotated without pressure.

Second try: When the registration sensor turns on, the machine feeds the paper normally. But, if the registration sensor again does not turn on, 'A jam' will display

6.8.7 REGISTRATION ROLLER PRESSURE RELEASE MECHANISM

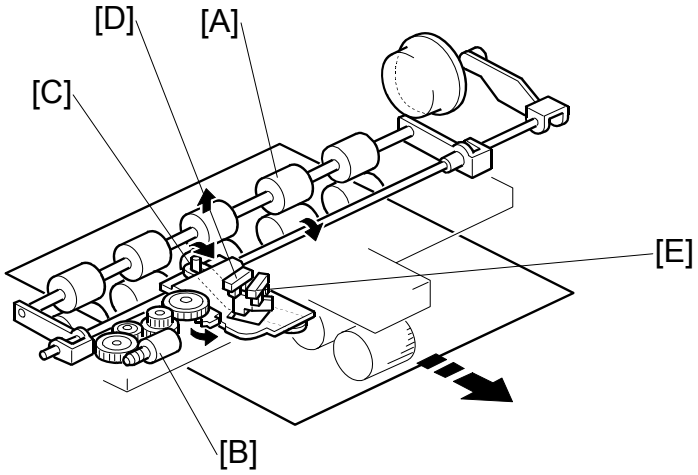

When a jam occurs at the paper registration roller [A], the pressure of the registration roller will be released so that the jammed paper can be removed easily.

The registration press motor [B] turns and pushes down the pin [C]. This releases the pressure of the registration roller.

The registration roller press sensor [D] detects when the registration roller is in the correct position for paper feed.

The registration roller release sensor [E] detects when the registration roller is in the correct position for jam removal.

6.8.8 DOUBLE FEED DETECTION

Mechanism

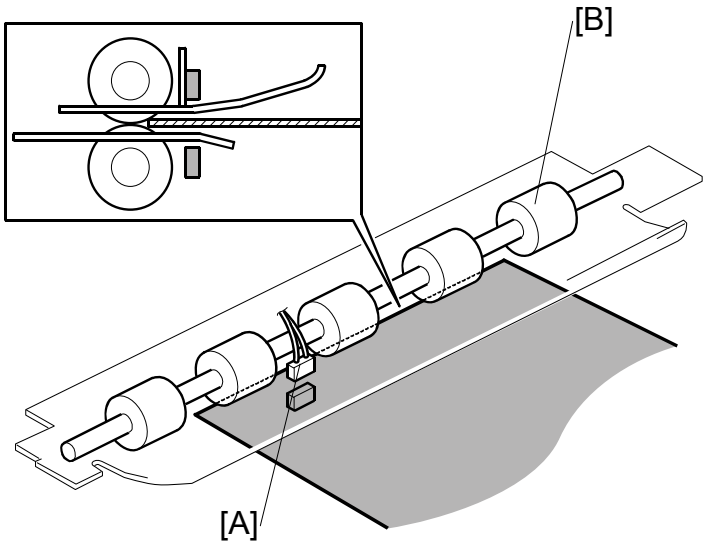

The double feed sensor [A] at the registration roller [B] detects differences in the quantity of light through the paper. The sensor measures this at about 13 mm from the leading edge of the paper. If the quantity of light becomes less, the machine detects a double feed.

NOTE: 1) Do not use paper that is printed on the rear side, or the double feed sensor might detect incorrectly.
2) Do not change the paper type in the middle of a job
3) Double feed will not be detected for the first sheet of paper.

Recovery from Double Feed

When two sheets of paper feed through together at the registration sensor, and if the two sheets of paper get to the double feed sensor, the machine detects a double feed and stops paper feed.

However, if the two sheets of paper are separated before they get to the double feed sensor and the second sheet does not get to the registration sensor, the machine will not detect a paper jam. But when paper feed starts again, the registration sensor detects paper almost immediately after the paper feed motor starts (paper is already fed inside the machine, so the registration sensor detects the paper quicker than normally). If this occurs, the paper feed motor stops until the correct time to feed the paper into the machine, to prevent the paper from being fed too early.

This procedure only occurs if the output from the registration sensor goes high while the output from the feed start sensor is high (between the 184 and 289 degree points).

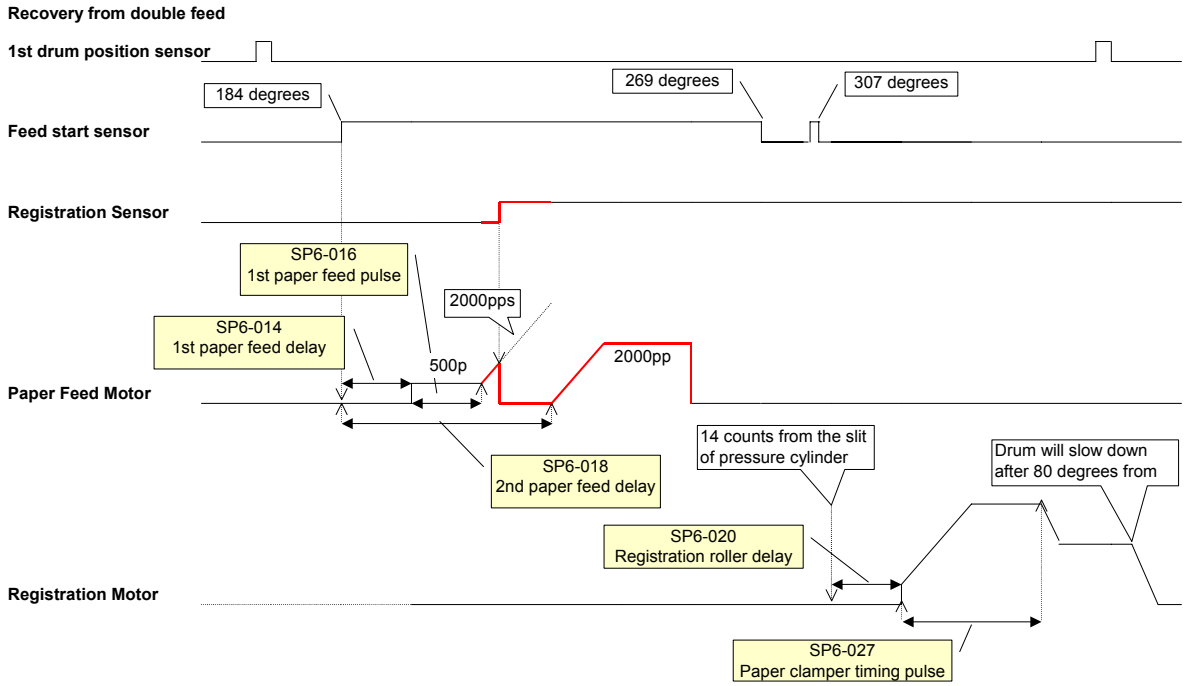

6.8.9 PAPER TABLE ANGLE ADJUSTMENT MECHANISM

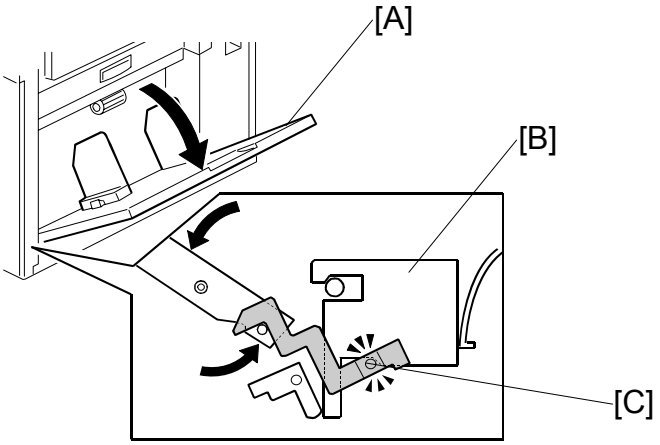

There are two paper table open positions: level, and 15 degrees upward slant. Normally the paper table is set at the level position.

The 15 degrees upward slant position is used to feed special types of paper, such as envelopes, which are difficult to feed at the level position. In the slanted position, the tray capacity is reduced.

As the paper table [A] is lowered from the closed position, the pin on the lever [C] engages the cutout in the lock bracket [B]. Then, the paper table stops at the level position.

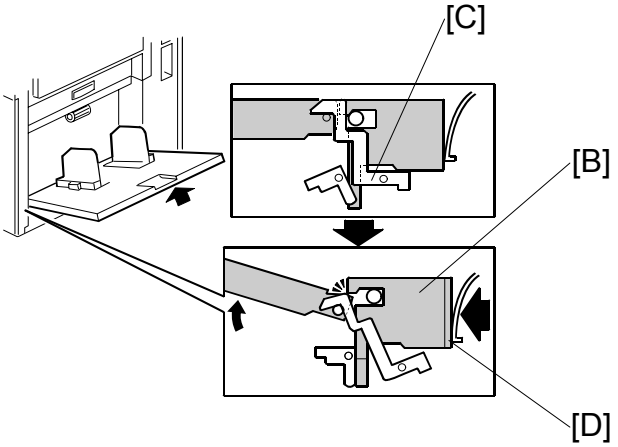

When the paper table is slightly raised from the level position, the spring plate [D] pushes the lock bracket [B], and the pin on the lever [C] disengages. This stops the table at the 15 degrees upward slant position.

6.8.10 PAPER TABLE UP/DOWN MECHANISM

Paper Table Drive Mechanism

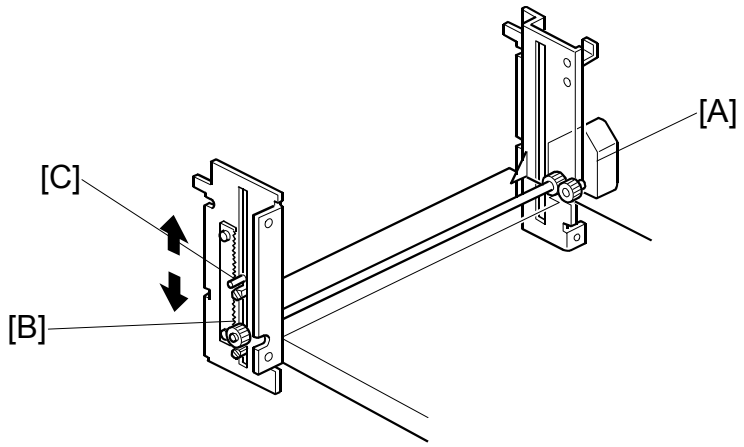

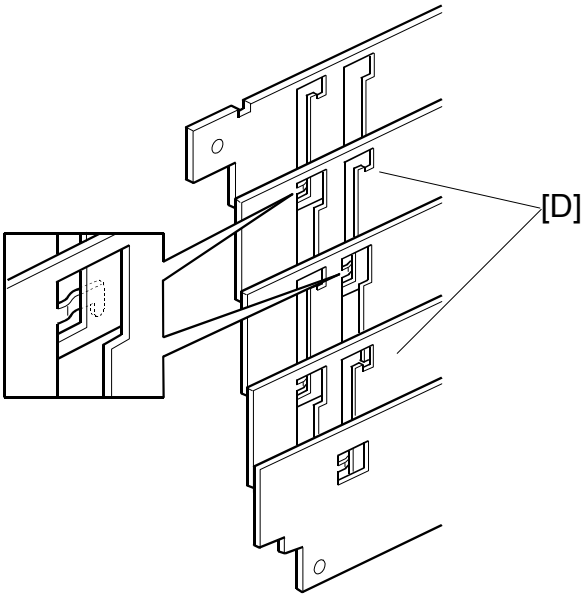

An independent dc motor, the paper table motor [A], drives the paper table. When the motor turns, the pinion [B] turns along the rack [C], moving the paper table up or down.

To reduce noise, there is a shutter cover below the table, which is a combination of 5 plates. The shutter closes the opening beneath the paper table when the table is lifted up.

NOTE: Although each plate of the shutter looks similar, only the second and fourth plates [D] from the top are the same in shape. The other plates are all different from each other. Be sure to re-assemble in the correct sequence.

6.8.11 PAPER SIDE FENCE MECHANISM

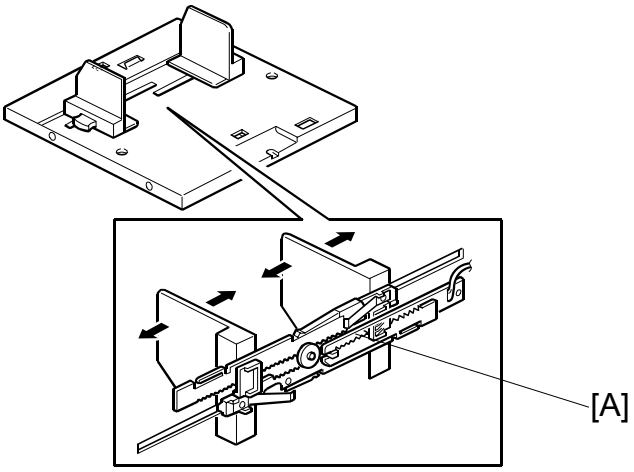

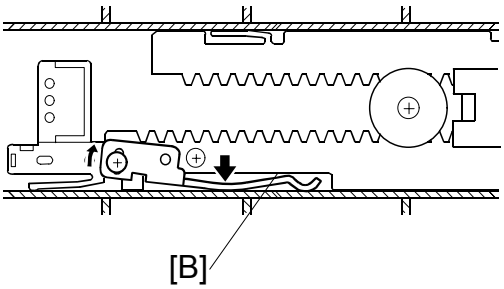

The left and right side fences move together due to a rack and pinion mechanism.

The actuator plate [A] is attached to the rack. This actuates the paper width detection board, to detect the position of the side fences (see Paper Size and Paper End Detection).

The side plate friction pads on the front and rear paper side fences prevent multiple feed. These are especially useful when thin paper is used.

There are two spring plates [B] applying pressure against the racks (one spring plate each for the right and left racks). Normally, there is no pressure applied to the racks. However, during long copy runs, the side plates may move away from the sides of the stack. By adjusting the position of the spring plates, the side fence pressure can be increased.

6.8.12 SIDE FENCE LOCK LEVER

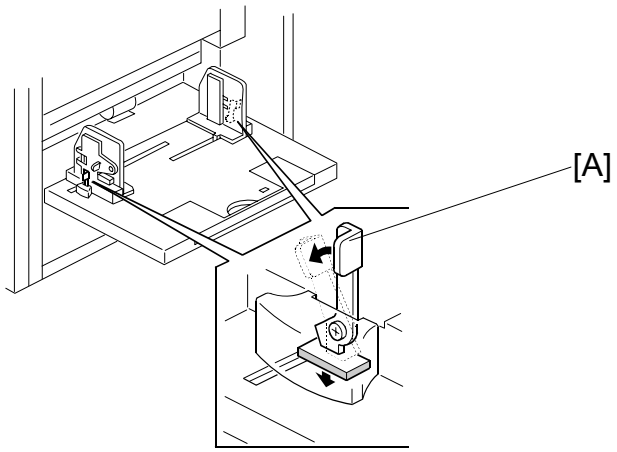

To prevent the side fences from moving during printing, the user can push down the levers [A].

6.8.13 DETECTION MECHANISMS

Paper Size and Paper End Detection

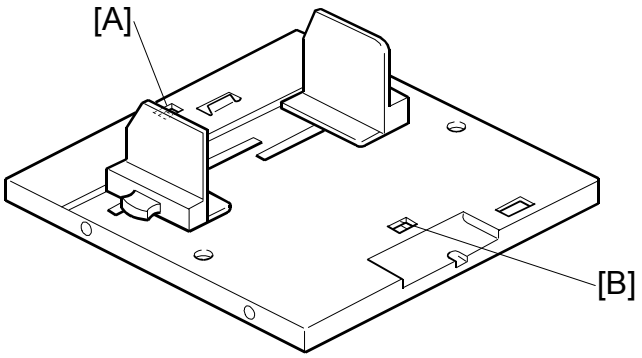

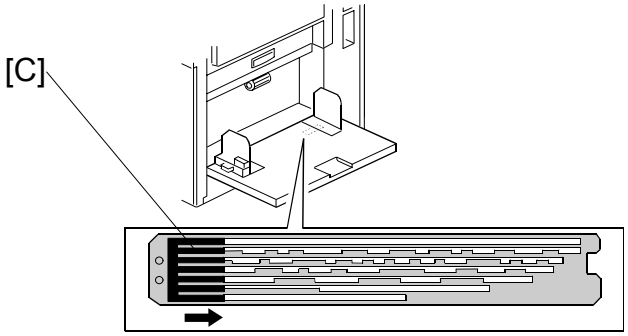

When paper is placed on the paper table, the paper end sensor [A], which is a reflective photosensor, is activated.

If B4 sized (or 8 1/2" x 14") paper or larger is set on the paper table, the paper length sensor [B] is activated.

The actuator plate [C] is attached to the rack for the paper side fences. The paper width detection board detects the position of the side fences. The paper size data is sent to the CPU in combination with the status of the paper length sensor.

Table Upper/Lower Limit Detection and Paper Height Control

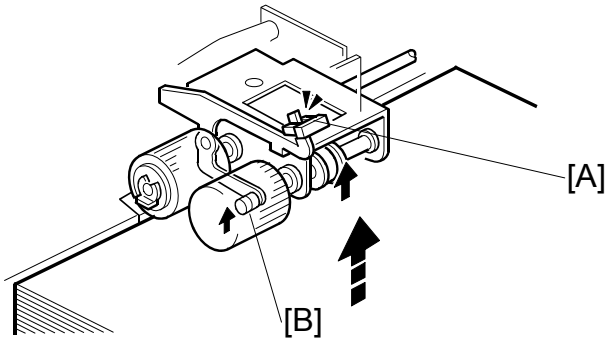

When the paper table moves up, the top of the paper stack contacts the pick-up roller [B], lifting it up. Then, when the paper height sensor [A] is actuated, the paper table stops.

During a printing run, sheets are fed from the stack, and the pick-up roller lowers. When the paper height sensor is de-actuated, the paper table motor starts turning and lifts the paper table until the sensor is actuated again. In this way, the top of the paper stack remains at the same position during printing.

When the tray lowers, the lower limit position is detected by the paper table lower limit sensor (not shown), which is located beside the paper table motor.

Paper Table Open Detection

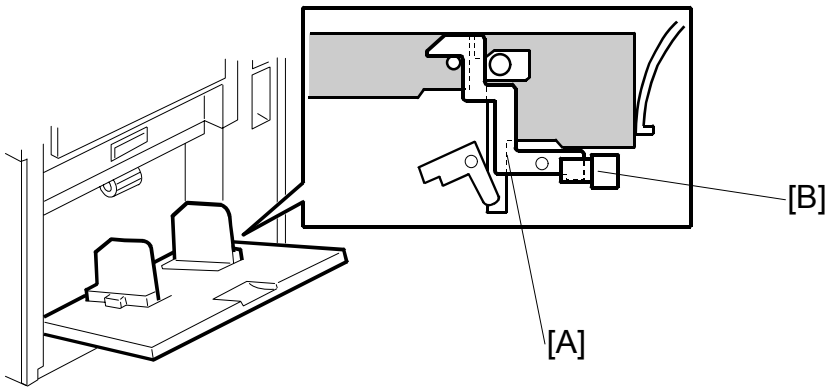

When the paper table is open, the lever [A] activates the paper table set sensor [B]. If the paper table remains closed and the sensor is not activated, guidance will be displayed on the operation panel.

Paper Amount Detection

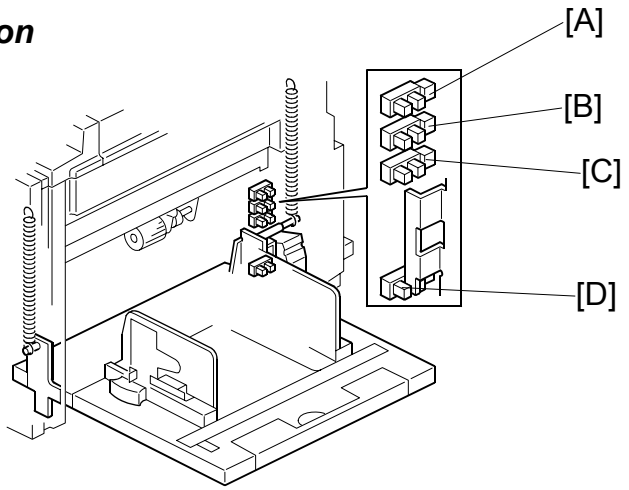

The combination of on/off signals from the remaining paper sensors 1, 2 and 3 ([A] [B] [C]) and the paper table lower limit sensor [D] detect the amount of paper on the paper feed table.

The machine checks the amount of paper when the paper feed table moves up and the paper height sensor turns on.

There are 5 levels (0, 25, 50, 75, 100%), and the current level can be checked with a network utility.

Amount	Height	**Amount 1 [A]**	**Amount 2 [B]**	**Amount 3 [C]**	**Lower limit [D]**
25%	ON	ON	OFF/ON*1	OFF/ON*1	OFF
50%	ON	OFF	ON	OFF/ON*1	OFF
75%	ON	OFF	OFF	ON	OFF
100%	ON	OFF	OFF	OFF	OFF/ON*1

*1: Either OFF or ON

NOTE: The paper end sensor detects when the level gets to 0%.

The data from the remaining paper sensors is stored when the paper feed tray goes down after printing, and the machine continues to display the correct amount of remaining paper.

But, in the following situations, the machine does not detect the paper amount. Because of this, the machine displays a temporary amount until the next detection.

- When paper is taken off or added to the paper feed table.
- When power turns on or after recovery from energy saver mode.

6.8.14 PAPER FEED TIMING

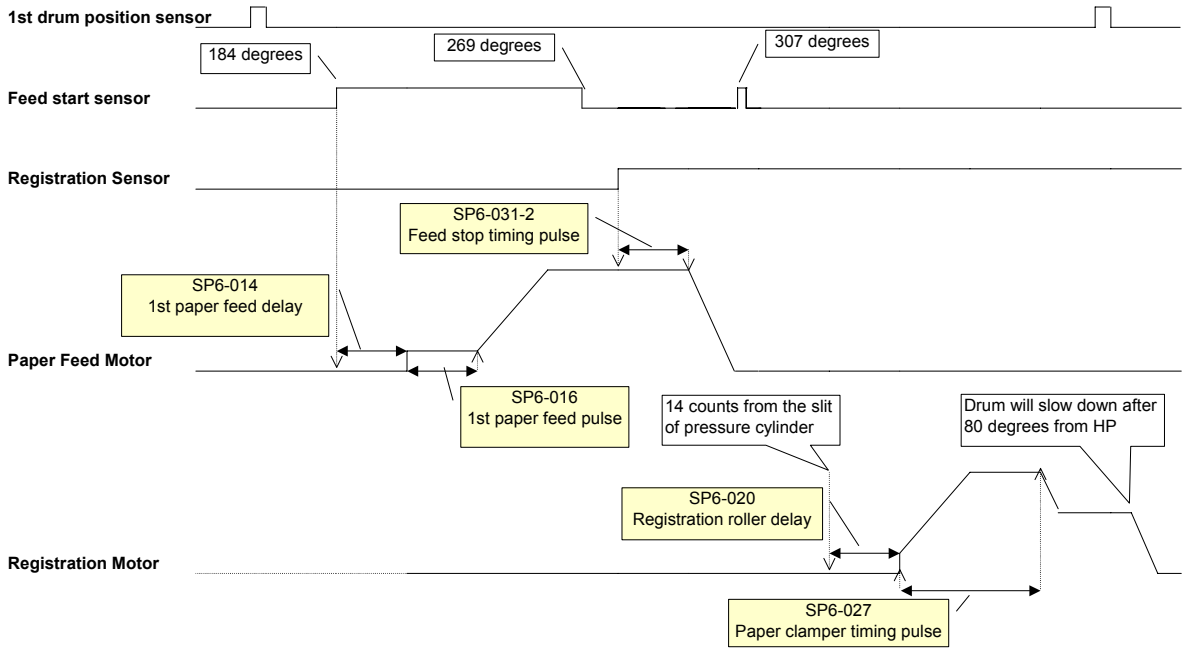

Paper feed timing for maximum length paper (447mm)

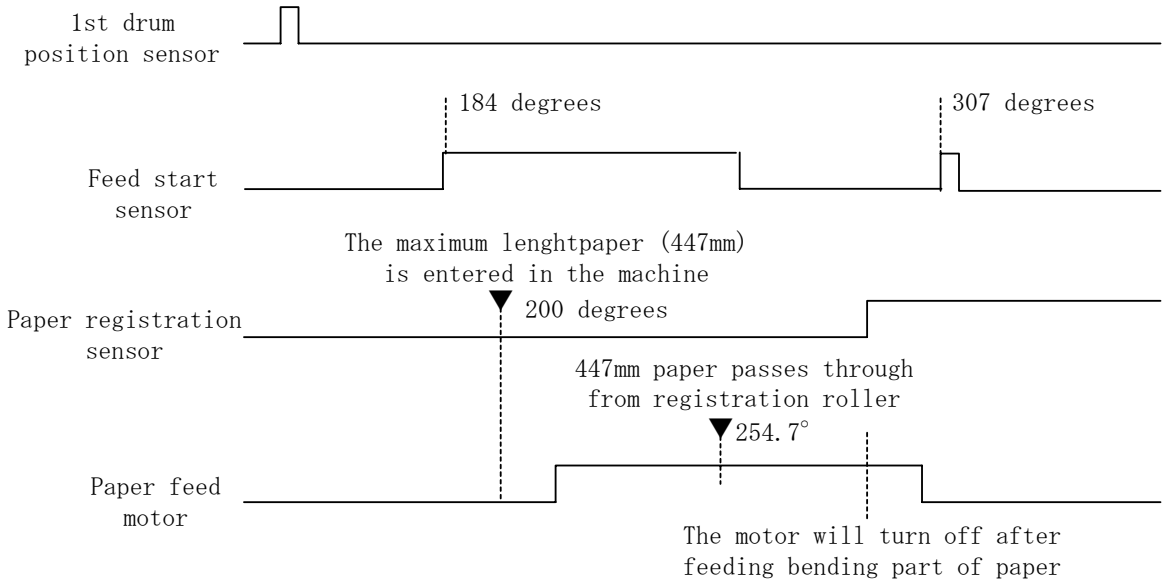

1. The feed start sensor will turn on after the drum rotates 184 degrees and 307 degrees.
2. The paper feed motor starts soon after the 184-degree point. But, for maximum length paper (447mm), the feed motor starts after the drum turns 200 degrees. This is because, when the drum is at 184 degrees, the trailing edge of the previous sheet is still feeding.

3. The paper feed motor will turn off soon after the paper registration sensor turns on. This ensures that the paper is buckled sufficiently at the registration roller, to prevent skew.
4. The trailing edge of the maximum length paper (447mm) passes the registration roller at 254.7 degrees after drum home position.
   - At 200 degrees, the previous sheet is still passing the paper feed roller.

Paper feed jam (A jam)

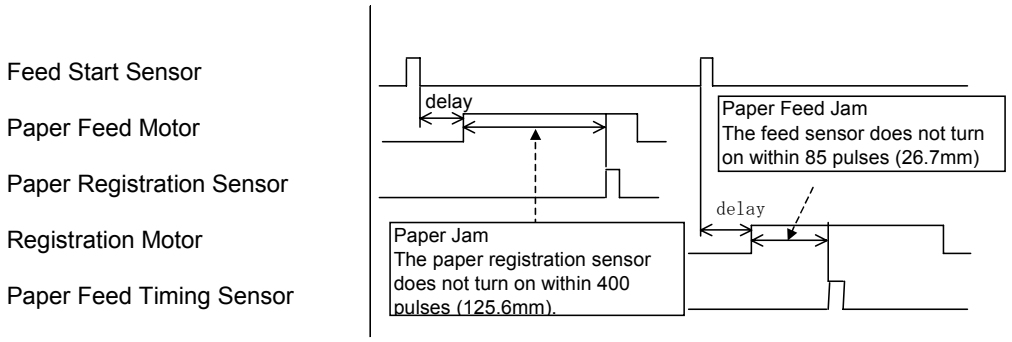

6.9 PRINTING AND PRESSURE CYLINDER

6.9.1 OVERVIEW

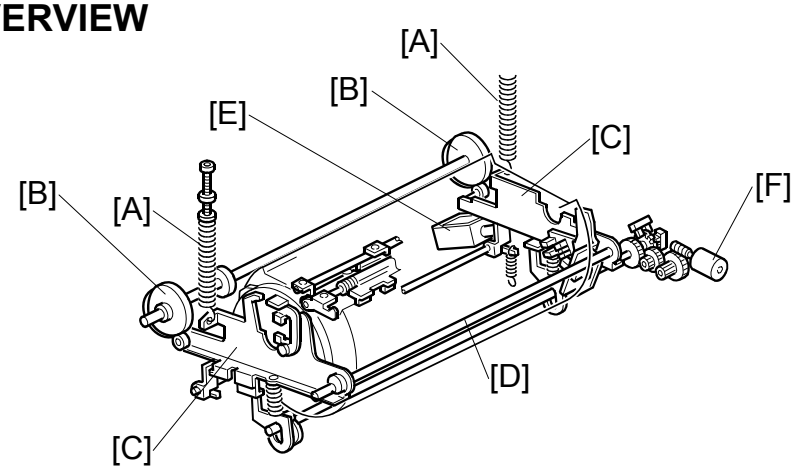

This model uses a pressure cylinder, instead of a press roller.

Two printing pressure springs [A] (one each at front and rear) pull the pressure cylinder up against the drum through the front and rear printing pressure arms [C]. (The arms rotate around the shaft [D].) Normally, the arms are engaged and the printing pressure is not applied. When the paper reaches the image transfer area, the arms are released by the printing pressure release solenoid [E].

The printing pressure cams [B] control the printing pressure application area to avoid the master clamper on the drum.

In this model, there are two possible master sizes. Printing on a large master (A3 sized cut) or small master (A4 sideways sized cut) is selected automatically (only if the optional ADF is used). The printing pressure cams include two shapes, one for A3 printing and one for A4 printing, so that the machine can switch to the appropriate printing area.

The paper clamper catches the leading edge of the paper after it has passed the registration roller section.

If the paper is still wrapped around the pressure cylinder after it has passed the image transfer area, the lower wrapping jam sensor detects it. (The upper wrapping jam, which is paper wrapping around the drum, is detected by the paper exit sensor in the paper delivery unit.)

The print pressure adjustment motor [F] adjusts the print pressure to the correct value for the current temperature and speed of printing. This is done to prevent changes in image density.

6.9.2 PRESSURE CYLINDER

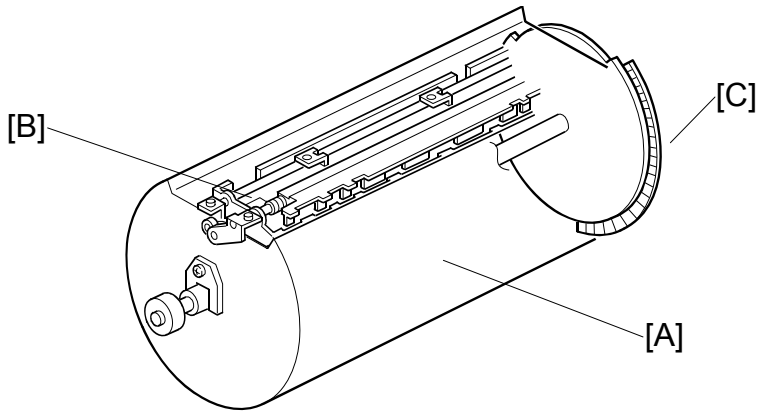

To stabilize the image density and print registration, and to decrease noise during printing, the pressure cylinder [A] has the same diameter as the drum (diameter 180 mm and 300 mm in circumference).

The paper clamper [B] is on the outer surface of the pressure cylinder, and the encoder plate [C] for monitoring the speed of rotation is on the rear of the pressure cylinder. The actuators for the feed start timing sensor are also on the rear of the cylinder (☛ 6.8.2).

NOTE: 1) Do not damage the surface of the pressure cylinder. The surface is soft and easily damaged by impacts.
2) Do not clean the pressure cylinder surface with alcohol or other strong solvents. Use a cloth dampened with water. Periodic cleaning is required for this part.

6.9.3 PAPER CLAMPING

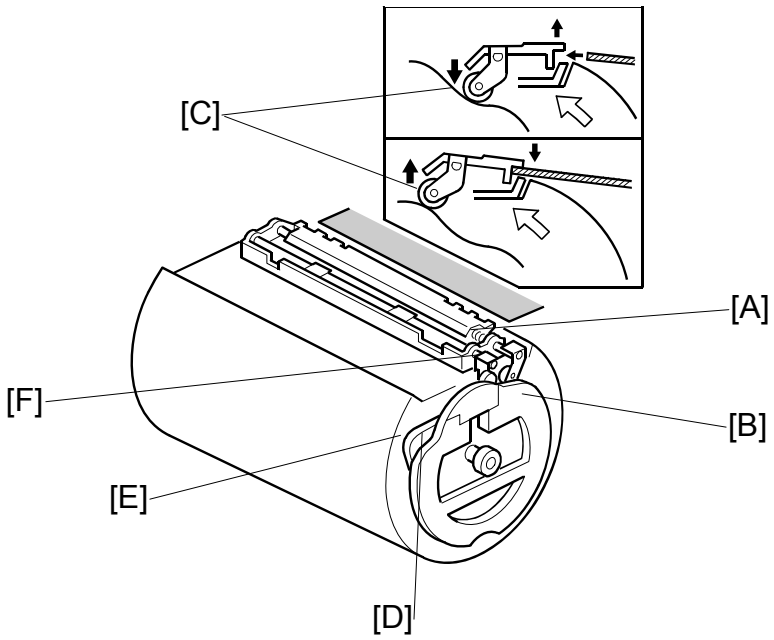

The paper clamper catches the leading edge of the paper after it has passed the registration roller.

Normally, the paper clamper is held open by spring [A]. At the same time as the leading edge of the paper enters the clamper, the high point of the cam [B] reaches the bearing [C] on the lever at the front end of the paper clamper, and the clamper closes.

Shortly afterwards, the bearing [C] reaches the low point [D], and the clamper opens, to release the paper (the paper is now held between the pressure cylinder and the drum, so the clamper is no longer needed). At about the same time, high point [E] on the cam pushes up another bearing (attached to lever [F]), and this forces some of the pawls towards the paper to push it out of the clamper.

6.9.4 PRINTING PRESSURE MECHANISM

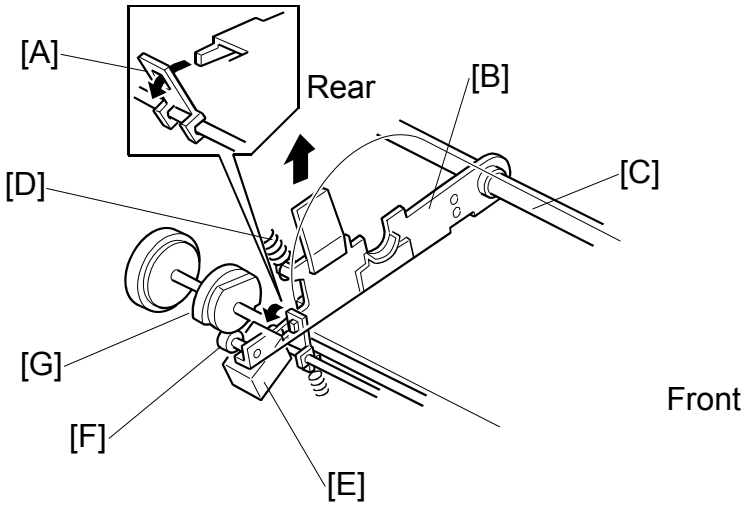

There are two printing pressure springs [D] and two printing pressure arms [B], one each at front and rear. The pressure cylinder rests on the printing pressure arms. Normally, the arms are engaged and the printing pressure is not applied.

The printing pressure cam [G] always rotates because of drive from the main motor. When the high point of the cam reaches the bearing [F] on the printing pressure arm, it pushes down the arm slightly. At this moment, a small gap is created between the hook on the arm and the printing pressure release lever [A]. Then, the printing pressure release solenoid [E] can release the arms. This occurs when the paper reaches the image transfer area.

When the arms are released, the two printing pressure springs pull the pressure cylinder up against the drum through the front and rear printing pressure arms, which turn around the release arm shaft [C].

The printing pressure cam controls the printing pressure application area to prevent printing pressure from being applied to the master clamper area on the drum. After the printing pressure arms are released, the printing pressure is applied while the bearing on the printing pressure arm is riding on the low point of the cam. When it rides on the high point of the cam, the printing pressure is released to avoid the master clamper.

6.9.5 PRINTING PRESSURE CAM SHIFTING FOR A3/A4 SIZE MASTERS

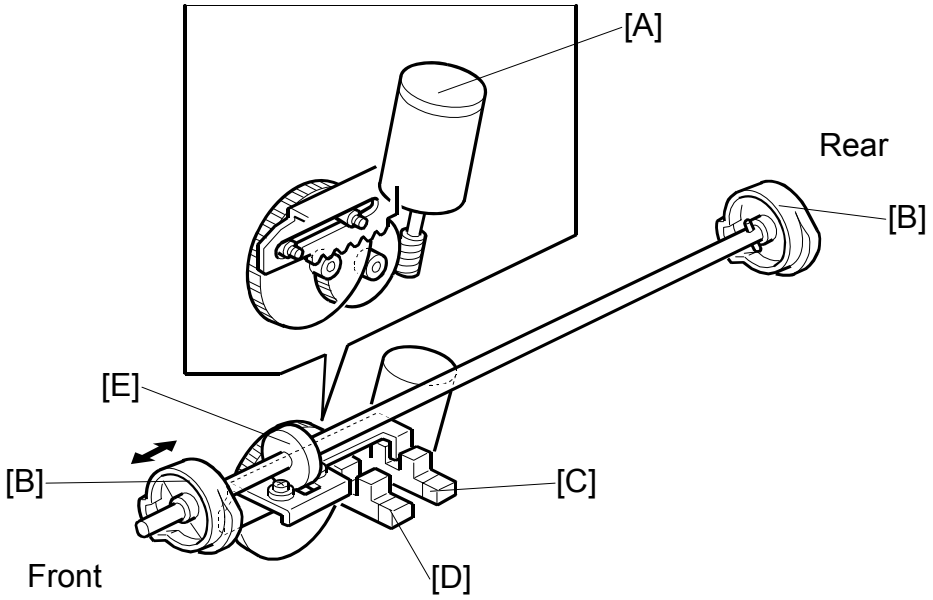

In this model, printing on a large master (A3 sized cut) or a small master (A4 sideways sized cut) is selected automatically (only if the optional ADF is used).

When the CPU detects that A4 sized paper (or 8 1/2" x 11") or smaller has been set in the sideways feed direction on the paper table, and two or more originals have been placed in the ADF, the machine automatically makes the smaller master.

NOTE: The master sizes are as follows:
Large Master: 320 x 530 mm (320 x 540 mm for U.S.A. models)
Small Master: 320 x 355 mm

Since the small master does not cover all the printing area of the drum screen, the last original's image is always made on a large master. This is to prevent the drum screen from drying if the next printing job is not done for a long time.

Therefore, a small master is not made when there is only one original in the ADF, even when printing on small paper. (In the Platen mode, the small master is never made because the machine cannot detect the number of originals.)

Based on the master size, the correct printing area is applied automatically. The printing pressure cam [B] includes two shapes (for A3 printing and for A4 sideways printing) in one part.

When switching the printing area, the pressure cam shift motor [A] turns. The switching plate [E] moves the cam shaft from side to side through some gears, which moves the printing pressure cam at each end of the shaft from side to side. The rack moves until either the A4 cam sensor [D] or A3 cam sensor [C] is activated.

6.9.6 PAPER RELEASE PAWLS MECHANISM

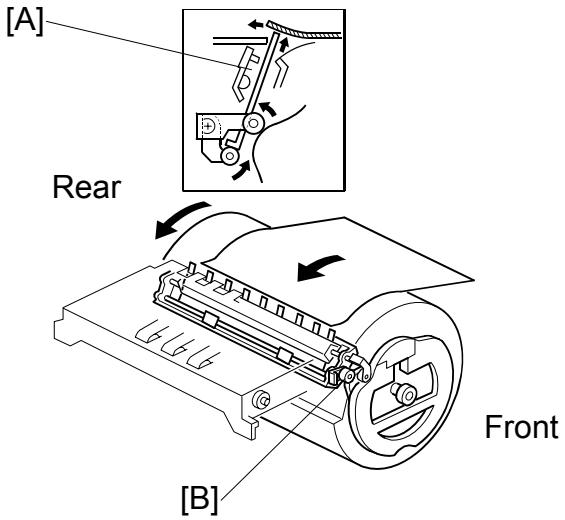

The paper is released shortly after the leading edge passes through the nip between the drum and pressure cylinder where the image is transferred to the paper, and it is fed towards the paper delivery unit.

As the pressure cylinder rotates, the other high point of the cam [B] reaches the bearing at the front end of the clamper. The clamper is again opened and the paper is released.

The opening angle of the clamper for releasing is larger than for clamping, and this causes the paper release pawls [A] to rise to push the clamped edge of the paper, which helps the release mechanism.

6.9.7 PAPER FEED CONTROL MECHANISM

Paper Feed Start Timing Detection

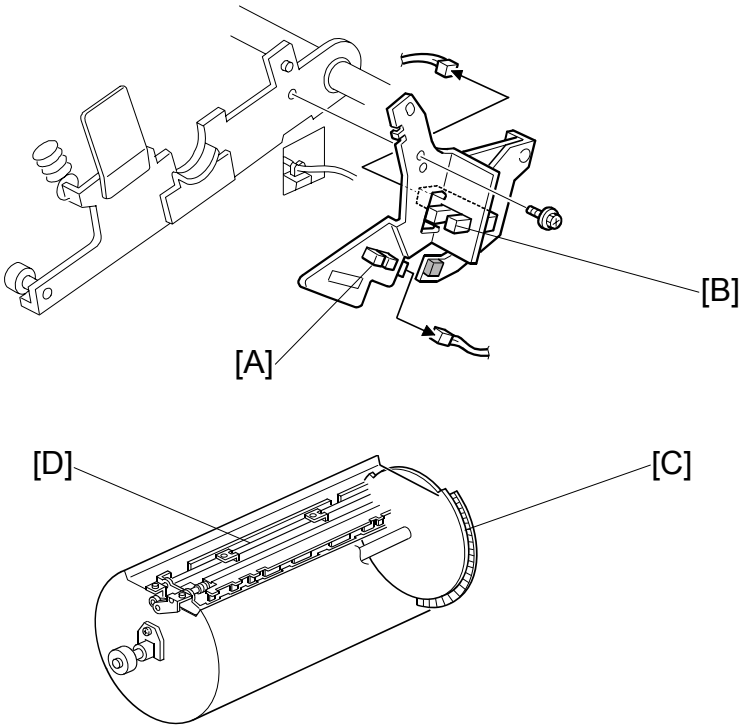

There are two actuators on the rear flange of the pressure cylinder. The two actuators activate the paper feed start sensor [A], to determine the start timing of the paper feed motor and the registration motor. (For details, refer to the Paper Feed section – Paper Feed Mechanism, and Paper Registration Mechanism.)

Detection and Feedback of Fluctuations in Pressure Cylinder Rotation

Since the pressure cylinder does not have a perfectly circular cross-section, the rotation speed tends to fluctuate.

The feed encoder [B], which is a photointerrupter, is activated by the encoder plate [C] at the rear of the pressure cylinder, generating a pulse signal. The CPU monitors this signal to detect fluctuations in the pressure cylinder rotation.

Depending on the detected fluctuation, the registration motor start timing is adjusted so that the leading edge of the paper is precisely caught by the paper clamper [D] on the pressure cylinder.

6.9.8 PRESSURE CYLINDER DRIVE MECHANISM

Overview

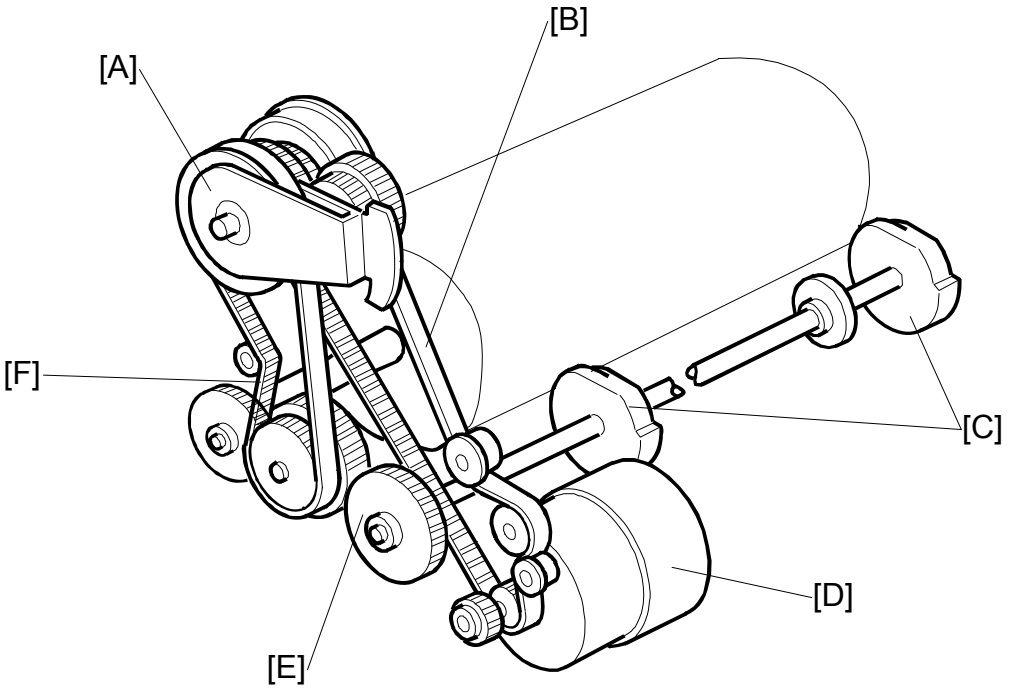

The main motor [D] rotates the pressure cylinder through the main drive timing belt [B], image up/down shift mechanism [A], timing belt [F], and gears, as shown above. The gear [E] is also driven by the main motor, and it rotates the printing pressure cams [C].

Pressure Cylinder HP Return Mechanism (Manual Pressure Cylinder Rotation)

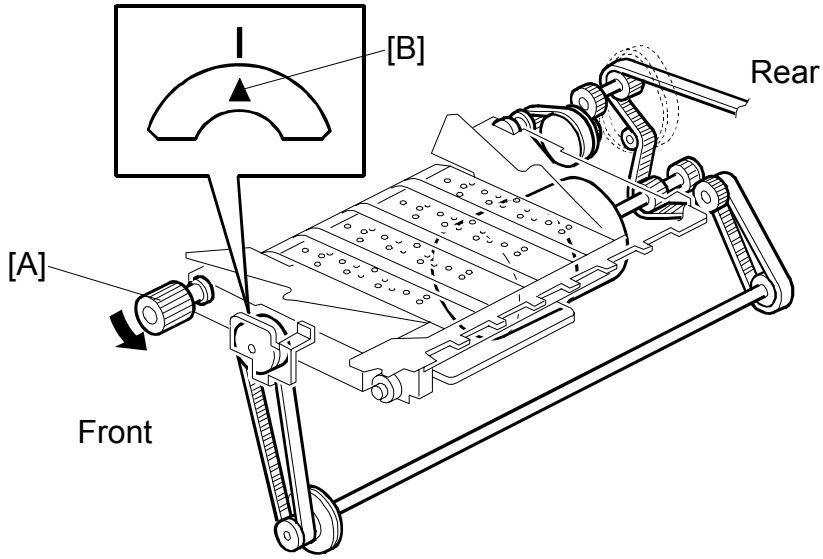

If the operator rotates the pressure cylinder by hand while removing the drum, the main motor drive also turns. It may not be possible to reinstall the drum, because the position of the drum drive gear will have changed.

The knob [A] is used to rotate the main motor drive manually. A small plate covers the knob normally, because it is only for emergency use.

If this happens, the knob can be used to turn the main motor drive. When the arrow [B] on the indicator disk meets the center division, the drive is at home position. The drum drive gear is also at home position, and the drum can be reset.

6.9.9 PRINT PRESSURE ADJUSTMENT MECHANISM

Mechanism

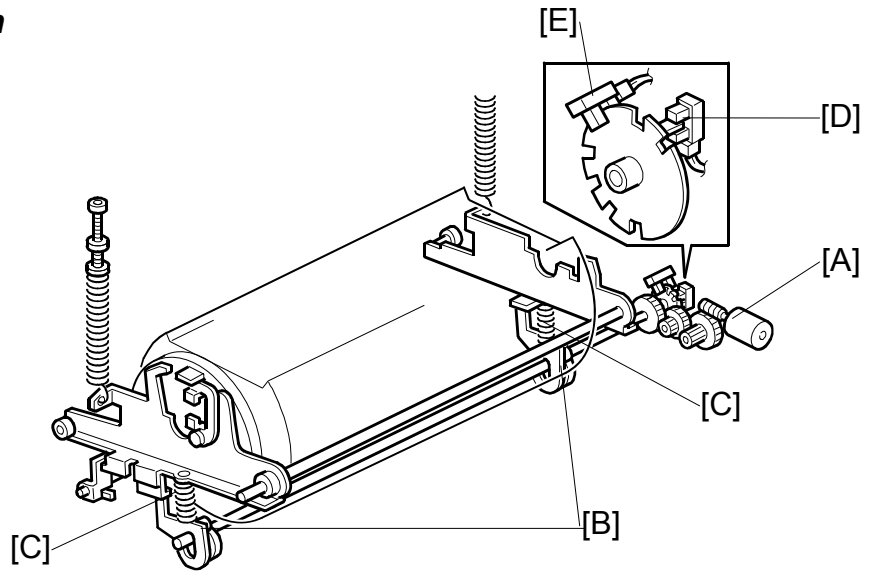

The print pressure adjustment mechanism adjusts the print pressure to the correct value for the current temperature and speed of printing. This is done to prevent changes in image density.

The print pressure adjustment motor [A] turns the print pressure adjustment cams [B]. The cams adjust the support springs [C] to change the print pressure.

There are 6 pressure settings, as shown below. The print pressure HP sensor [D] detects the print pressure home position (this is pressure level 2). The print pressure position sensor [E] detects the print pressure levels; to do this it monitors the notches in the disk.

	Very low Less than 15ºC	Low 15～19 ºC	Normal 19～25 ºC	High 25～29 ºC	Very high More than 29ºC
Trial	5	3	1	1	1
30 rpm	5	0	-	-	-
60 rpm	3	1	1	1	0
75 rpm	4	3	2	1	0
90 rpm	5	4	3	2	1
105 rpm	6	5	3	3	2
120 rpm	6	5	4	4	3
135 rpm	6	6	5	4	3

Printing pressure
6: Strongest, 0: Weakest

The print pressure for each setting in the above table can be adjusted with SP6-54 ~ SP6-58 (print pressure). Also, you can change all settings at the same time by the same amount with SP2-6-18 (print pressure shift amount).

If you do not want the pressure to change with print speed and temperature, set SP 2-6-16 to 'on'. Then the pressure will always be the same as the value that is set with SP 2-6-17.

CAUTION: If the pressure is too high, the master will become wrinkled.

Auto cycle printing, from master making

After the power is turned on or after the machine leaves energy saver mode, the print pressure adjustment mechanism is adjusted for the current temperature conditions. The adjustment is done when the machine detects that the drum is at home position.

Then at the start of master making, the print pressure adjustment mechanism is adjusted again. As a result, when the pressure is applied between drum and pressure cylinder at the start of printing, the correct pressure for the current conditions will be immediately applied.

The pressure for the 1st print is applied after the trial print is fed out.

After the first print, the print pressure depends on the print speed setting.

Only master making

Same as the first two paragraphs of 'Auto cycle printing, from master making'.

Only printing

The pressure for the 1st print is applied after the trial print is fed out.

After the first print, the print pressure depends on the print speed setting.

6.9.10 TIMING

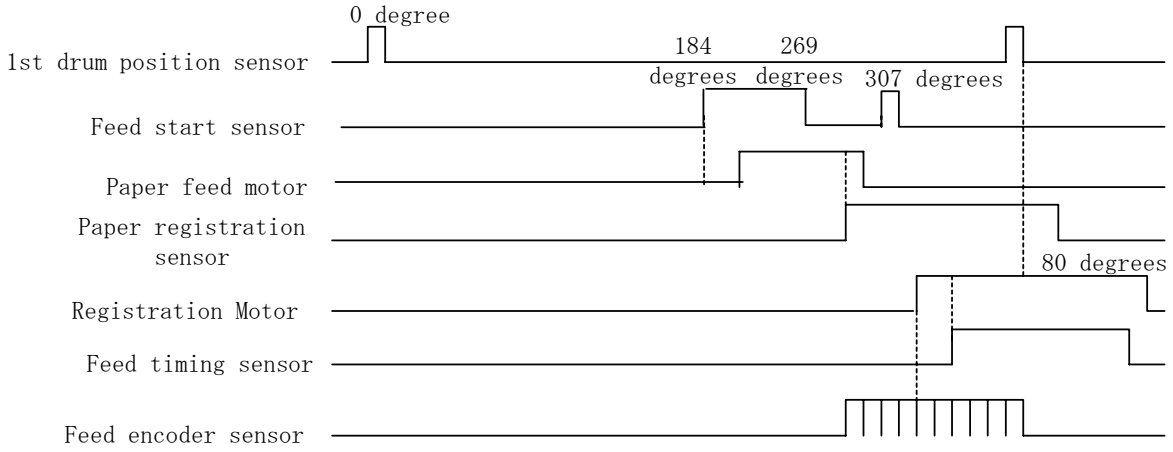

1. The feed start sensor turns on when drum turns 184 and 307 degrees.
2. The feed start sensor turns on when the drum turns 184 degrees. Soon after this, the paper feed motor turns on.
3. The paper feed motor turns off a short time after the registration sensor turns on, to ensure sufficient paper buckling to prevent skew.
4. When the drum turns to 307 degrees, the machine counts for a few pulses from the feed encoder sensor (number of pulses adjustable with SP 6-020). Then the registration motor turns on.
5. The machine counts the pulses from starting the registration motor until the paper feed timing sensor turns on. The number of pulses determines the amount of slip that is detected. The machine changes the time that paper feed starts, based on this number of pulses. This ensures that paper feed starts at the correct time.
6. There is some play in the pressure cylinder drive mechanism. This means that the cylinder does not start at exactly the same time as the main motor. To correct this, the machine monitors the feed encoder on the pressure cylinder and adjusts the speed of the registration motor.
7. The paper feed motor stops when it turns 80 degrees after the passing the 1st drum position sensor.

6.10 PAPER DELIVERY

6.10.1 OVERVIEW

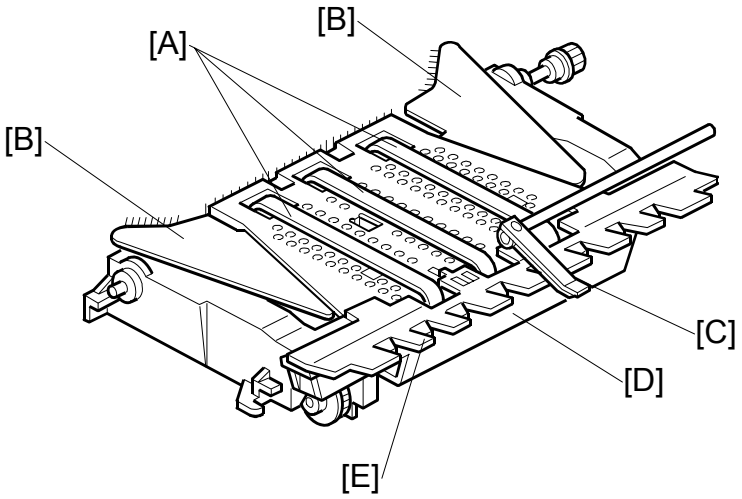

The paper delivery unit consists of three rubber belts [A] and the vacuum fan motor [D]. The rubber belts are driven by the main motor, and they feed the paper, which is held against the belts by suction generated by the vacuum fan motor.

The paper pick-off plate [E] is located close to the pressure cylinder, in order to prevent the paper from being wrapped around the pressure cylinder or entering under the delivery unit. But, if the paper is firmly stuck to the pressure cylinder, the plate moves away to prevent damage.

The paper guide wings [B] help to feed out the paper to the delivery table. A dc motor (the wing guide motor) changes the angle of the wings automatically. There are two settings, and the setting used depends on the paper type selected at the operation panel.

The exit sensor (not shown) detects paper misfeeds.

The exit pawl [C] prevents paper from wrapping around the drum. Three air knife fans help to separate the paper from the drum.

6.10.2 PAPER SEPARATION FROM THE DRUM

Exit Pawl Drive Mechanism

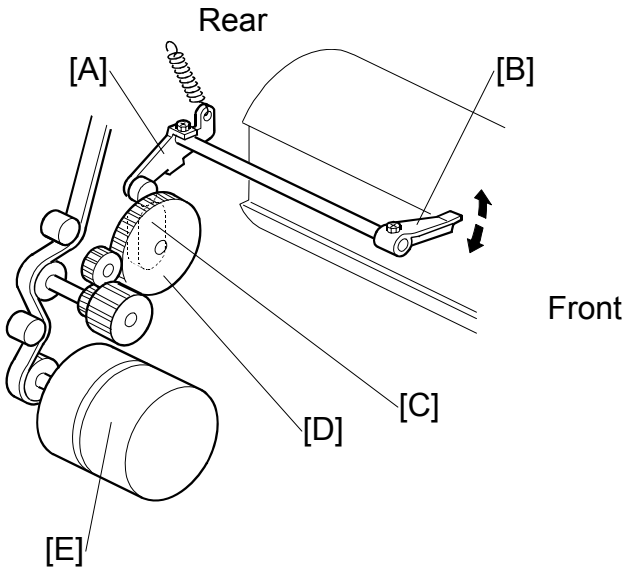

The exit pawl [B] guides the center of the paper. This prevents the paper from wrapping around the drum. As the drum rotates and the master clamper approaches the exit pawl, the exit pawl moves away from the drum.

As the main motor [E] turns, the exit pawl drive gear [D] turns. This gear contains a cam [C]. The cam follower on the exit pawl lever [A] rides on the cam. The exit pawl is connected to the exit pawl lever.

The lever turns clockwise when the cam follower rides on the high point of the cam, and the exit pawl moves away from the drum. This happens when the master clamper on the drum is approaching the exit pawl.

When the master clamper moves away from the exit pawl, the cam follower is now riding along the low point of the cam. Therefore, the exit pawl moves nearer the drum surface due to tension from a spring.

When printing pressure is not applied, the exit pawl is held away from the drum.

Air Knife Mechanism

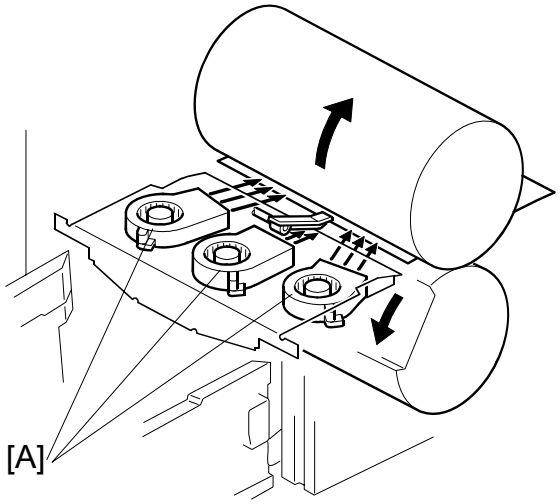

There are three air knife fans [A] above the paper delivery unit. These fans blow air against the leading edge of the paper that is just fed from the drum. This helps to separate the paper from the drum.

The air knife fans are more powerful than the ones in the previous models.

Paper pick-off plate mechanism

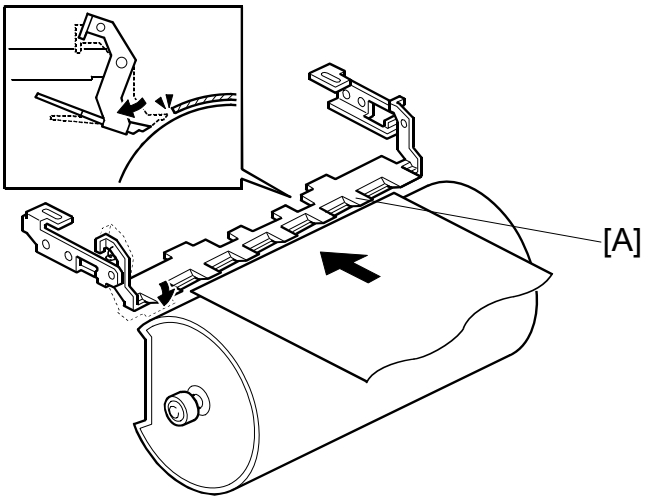

The paper pick-off plate [A] can move. When the paper is firmly wrapped around the cylinder, the pick-off plate cannot remove it. In this case, the paper moves back the pick-off plate and lifts it away from the pressure cylinder. This prevents jams that are caused by the paper being stuck at the paper pick-off plate.

NOTE: Refer to section 3 (Replacement and Adjustment) for how to adjust the gap between the pick-off plate and the pressure cylinder.

6.10.3 PAPER DELIVERY WING MECHANISM

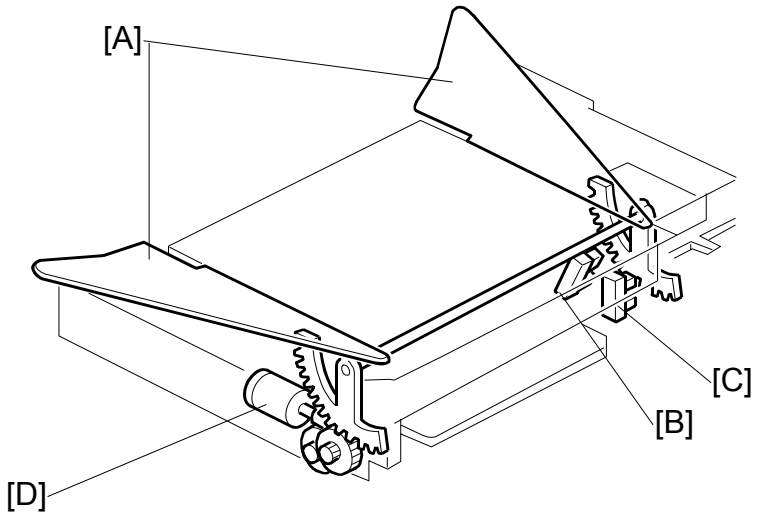

The paper guide wings [A] lift the side of the paper as it leaves the delivery unit.

This stiffens the paper so that the leading edge of the paper will not sag and brush against the sheets on the delivery table. This prevents the ink on freshly printed sheets from being smeared.

The angle of the paper wing guides can be changed automatically by the wing guide motor [D], depending on the paper type selected by the operator at the operation panel. When the paper type is changed, the motor automatically changes the angle of the wing guides.

The paper types that can be selected are standard, thin, thick, and special. Two additional settings for paper types can be customized as user 1 and user 2. The angle of the paper guide wings for each paper type can be adjusted with SP mode (SP6-13). In addition, the angle can be fixed for all paper types at the upper or lower position with a user tool (System Settings – Mode Settings – Deflector Angle), to override the SP6-13 setting.

The wing guide motor [D] moves the paper wing guides up or down through some gears. The wing lower position sensor [C] and wing upper position sensor [B] detect the high and low angle positions of the paper wing guides.

6.10.4 PAPER DELIVERY TABLE MECHANISM

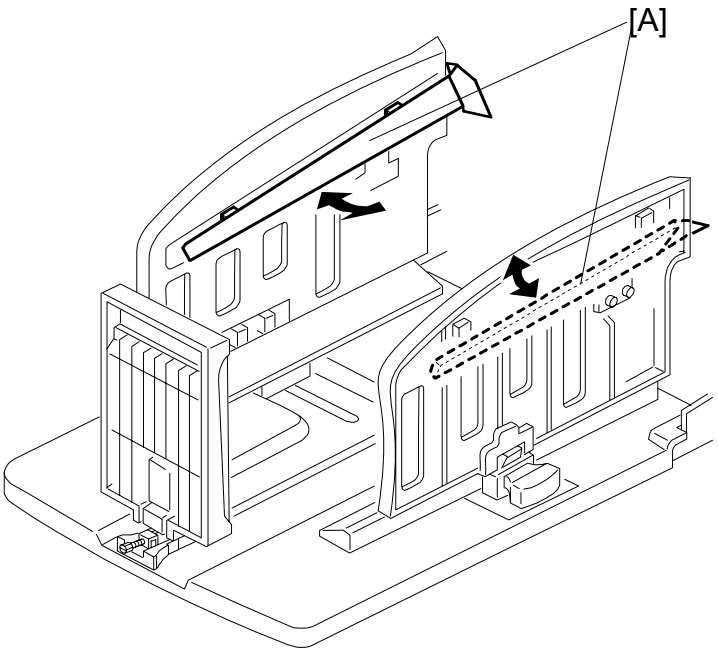

The paper delivery table consists of the rear side fence, front side fence, and end fence. The angle of the small paper guide [A] on each side fence can be changed by pulling the small paper guide.

The small guides help to stack the paper more evenly on the table. Both edges of the paper are guided by the guides as the copy is fed out. Then, the paper is rapidly fed out against the end plate for stacking.

See the next page for how to set these guides for each paper type.

6.10.5 ADJUSTABLE BUFFER FINS

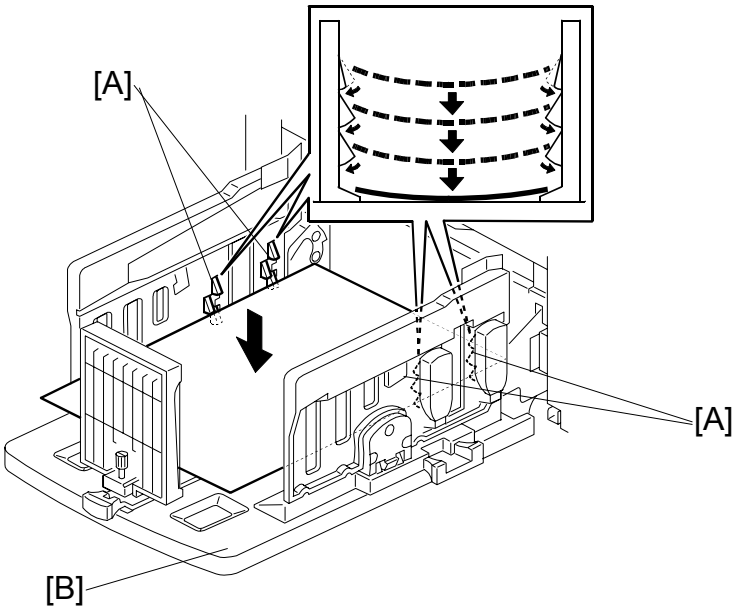

The printed paper bends upwards easily. This causes uneven stacking and ink stains on the back of the paper on the delivery table. The buffer fins [A] on the paper delivery table [B] lift the edges of the paper, to prevent this problem. When the paper is fed to the delivery table, these plates catch the edges of the paper, and the paper falls in a “U” shape, as shown in the diagram, with a gap between each sheet. The plates catching the edges also make the paper fall more slowly, and the ink dries before the paper reaches the stack.

The following table shows the recommended positions for these plates (and for the paper guide wings) for each paper type.

Paper Weight	Paper Size	Paper Guide	Plate
128 g/m^2 or thicker	A3 SEF, 11” x 17” SEF, B4 JIS SEF	Lower the wings	Down
	A4 SEF LEF, B5 JIS SEF LEF	Lower the wings	Down
52.3 g/m^2-128 g/m^2	A3 SEF, 11” x 17” SEF, B4 JIS SEF	Raise the wings fully	Up
	A4 SEF LEF, B5 JIS SEF LEF	Raise the wings to about 45 degrees	Up
52.3 g/m^2 or thinner	A3 SEF, 11” x 17” SEF, B4 JIS SEF	Raise the wings to about 45 degrees	Down
	A4 SEF LEF, B5 JIS SEF LEF	Raise the wings to about 45 degrees	Down

6.10.6 JOB SEPARATION MECHANISM

Overview

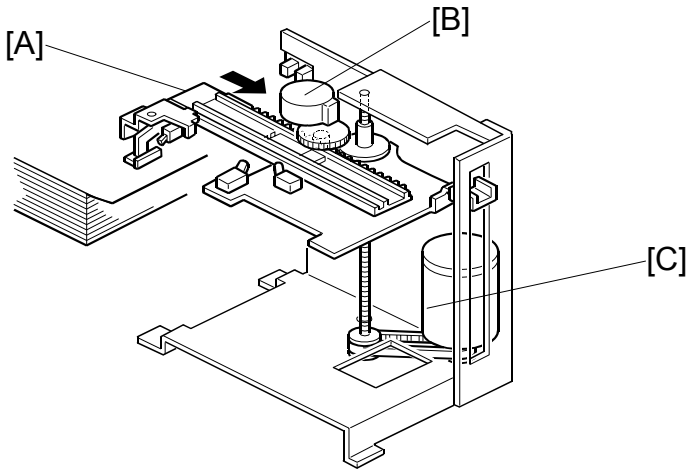

The job separation function can be selected using the Job Separator key on the operation panel. The print on the top of each print set on the paper delivery table is pulled out slightly by the sliding arm [A]. This function is used normally when two or more pages were set in the ADF or when in the Class mode.

When a job (a set of copies of one original) is completed, the job separator motor [B] turns on to move the sliding arm [A] onto the paper stack on the paper delivery table. Then, the slider lift motor [C] lowers the sliding arm.

A high friction material (a type of sandpaper) is attached to the edge of the sliding arm and it touches the top sheet of the paper stack. Then, the job separator motor turns on again to return the sliding arm. Only the top sheet is moved, and it is moved by about 25 mm.

The sliding arm stays in the same position till the first print of the next job is fed out to the paper delivery table. Then, the job separator and slider lift motors return the sliding arm to the home position.

The slider lift motor can move the sliding arm up and down through a range of approximately 60 mm. This means that the job separation function can work with up to approximately 600 sheets of paper (for 64 g/m^2 paper) on the paper delivery table.

NOTE: For the large capacity tray system (C641), the job separation function can work with up to approximately 3000 sheets of paper. This is because the C641 can communicate with the C262, and the paper delivery table for the C641 moves down when the thickness of the stack increases.

Sliding Arm Control

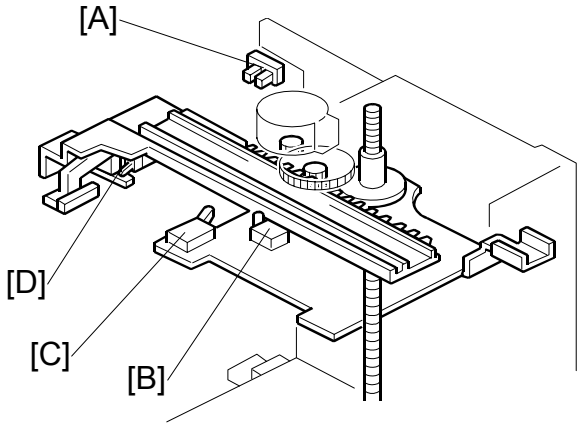

The sliding arm moves across until the slider position sensor [B] (a micro-switch) tuns on. When the sliding arm returns, the job separation motor turns until the slider HP sensor [C] (a micro-switch) turns on.

While the sliding arm is being lowered onto the top sheet of the paper stack, the paper sensor [D] (a micro-switch) turns on when the edge of the sliding arm touches the paper.

The slider upper limit sensor [A] detects when the sliding arm is at its highest possible position.

6.10.7 PAPER DELIVERY JAM SENSORS

Paper Delivery Jam

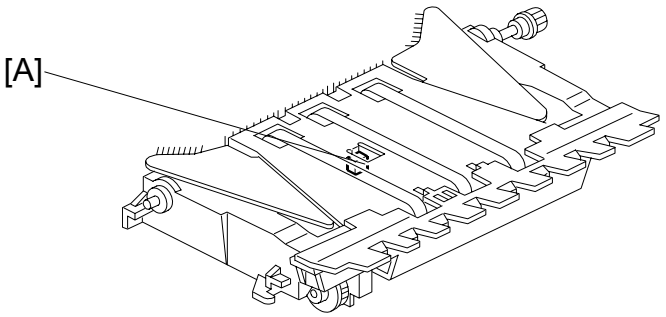

The exit sensor [A] detects paper jams.

Paper Lower Wrapping

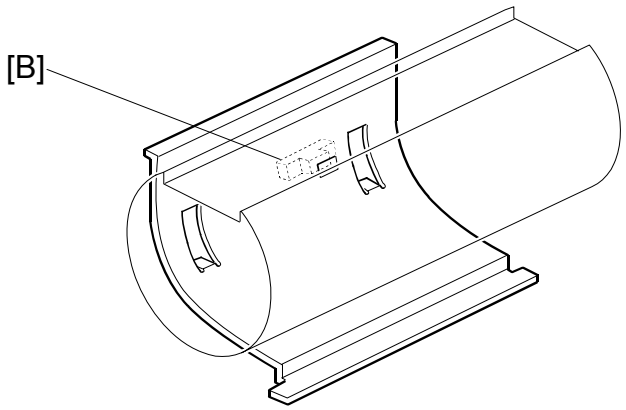

The lower wrapping jam sensor [B] detects when paper is wrapped around the pressure cylinder.

6.10.8 PAPER DELIVERY UNIT DRIVE MECHANISM

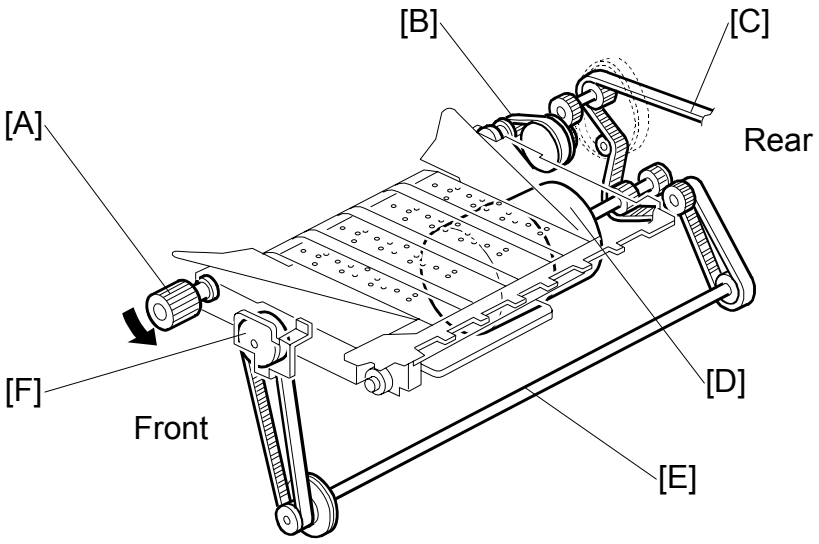

The paper delivery unit is driven by the main motor. As the main motor [D] turns, the main drive timing belt [C] turns. Drive is transmitted to the pulley [B] at the end of the rubber belt drive roller shaft, through the gears and the timing belt.

The knob [A] can be used to rotate the main motor drive manually. A small plate normally covers the knob, and it is not accessible for the operator. It is for emergency use only.

When the knob is turned by hand, it turns the rubber belt drive roller shaft. The rotation is transmitted to the main drive timing belt [C] via the route opposite to the normal main motor drive.

At the same time as the knob is turned, the drive position indicator disk [F] turns through the shaft [E] and two timing belts. The arrow mark on the disk shows the position of the main motor drive.

If the operator rotates the pressure cylinder by hand while removing the drum, the main motor drive also turns. It may not be possible to reinstall the drum, because the position of the drum drive gear will have changed.

If this happens, the knob can be used to turn the main motor drive. When the arrow on the indicator disk meets the center division, the drive is in the home position. The drum drive gear also in the home position, and the drum can be reset.

6.10.9 PAPER EXIT JAM DETECTION

Paper exit jam (C jam)

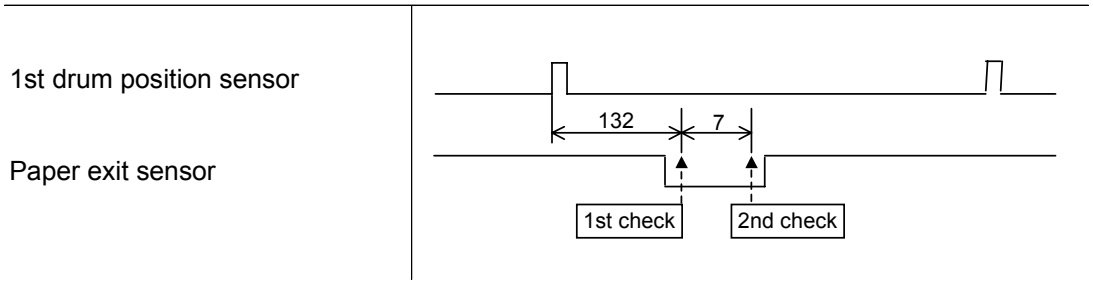

A paper exit jam occurs when the paper exit sensor detects the paper twice.

Upper and lower wrapping jam (B jam)

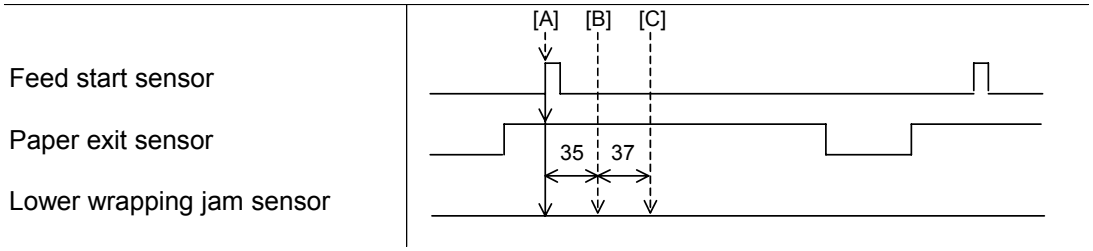

The machine checks for jams at three times.

- [A] Lower wrapping jam sensor is on: Lower wrapping jam
- [B] Paper exit sensor and lower wrapping jam sensor are off: Upper wrapping jam
- Lower wrapping jam sensor is on at [A], [B] or [C]: Upper wrapping jam

6.11 IMAGE UP/DOWN SHIFTING

6.11.1 OVERVIEW

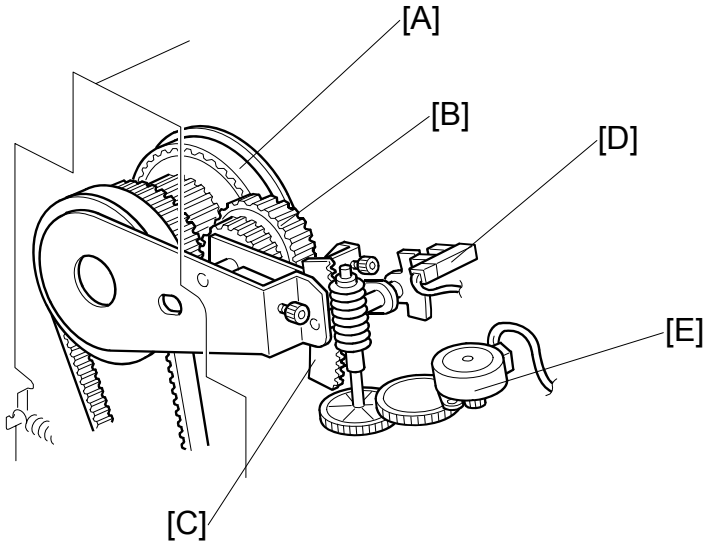

In Image Up/Down Shifting mode, which can be operated at the operation panel, the image position on the print can be moved forward or backward with respect to the paper feed direction.

The image shift amount is controlled by changing the registration motor start timing. However, when the paper feed timing from the registration roller changes, the pressure cylinder position must also be changed so that the paper will be caught properly by the paper clamper on the pressure cylinder. This is also necessary to make sure that the printing pressure application area is correct, since the pressure cylinder cross-section is not completely circular.

The image up/down shifting mechanism changes the position of the pressure cylinder to match the amount of shift selected.

The mechanism is located in the drum drive gear [A]. It is composed of the image shift gear [B], image shift motor [E], image shift HP sensor [D], and image shift arm [C]. The HP sensor is activated when the image shifting arm is at home position.

6.11.2 IMAGE UP/DOWN SHIFTING MECHANISM

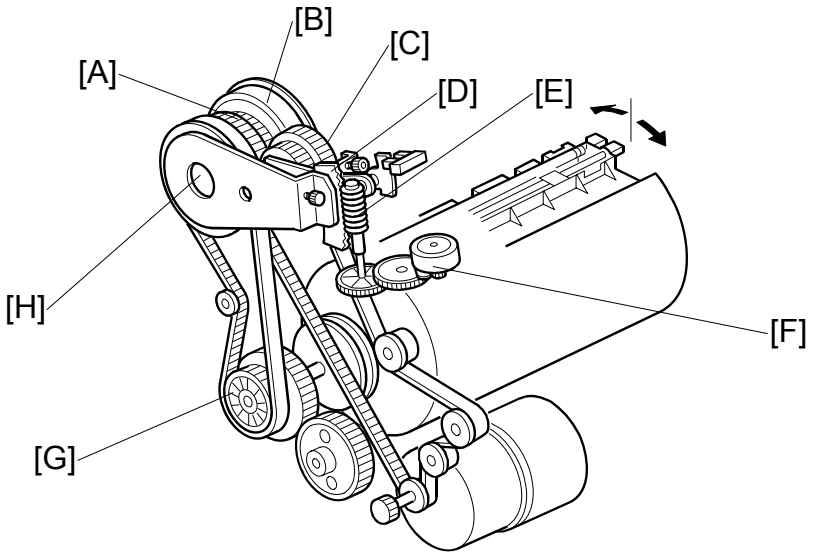

This section explains how the machine changes the position of the pressure cylinder to cope with the changed registration start timing in image shifting mode.

The image shift motor [F] turns by an amount that depends on the image shift amount selected at the operation panel. The motor drives the image shift arm [D] through the worm gear [E].

The image shift arm pivots about the shaft [H]. The image shift gear [C], attached to the image shift arm, also rotates about the shaft as it moves around the surface of the primary gear [A]. The image shift gear turns the primary gear as it moves around its surface.

The primary gear is connected to the idler pulley [G] via a timing belt. The idler pulley rotates the pressure cylinder drive gear (not shown). Therefore, moving the image shift gear up or down rotates the pressure cylinder drive gear, which changes the position of the pressure cylinder.

The drum drive gear [B] is also on the shaft [H]. However, it does not turn when the primary gear turns. Therefore, the drum stays in the same position (the home position) even though the position of the pressure cylinder changes.

In this way, a phase difference is made between the positions of the drum and pressure cylinder.

6.12 SECURITY MODE

The security mode protects users from looking at other user's originals.

6.12.1 FUNCTION OF SECURITY MODE

In the security mode, these two things are protected.

- The master eject box cannot be pulled out (master eject box lock mechanism)
- The drum cannot be pulled out (this is because it moves from the drum home position to the master making position)

6.12.2 HOW TO ENABLE AND DISABLE SECURITY MODE

The security mode is enabled and disabled with a user tool (System Settings – Administrator Tools – Security Option: Set to 'High' to enable).

When you want to remove the master eject box or drum, the security mode must be disabled temporarily. To do this, you can push the 'Security' button on the display and then enter the password.

You can also use SP8-7-3 to disable the security mode temporarily. Then, after you turn the main switch off and on, the security mode will recover.

CAUTION: Do not disable the security mode unless you have permission from the administrator.

6.12.3 SPECIFICATIONS OF SECURITY MODE

The 'additional print' feature cannot be used.

When security mode is disabled temporarily, security mode cannot be enabled if the machine indicates that the cover is open or the master eject box is not installed correctly.

When security mode is disabled temporarily, the master eject box will be locked when security mode is enabled again. But if there is no master on the drum, the drum does not go to the security mode position (this is the master making position). It stays at home position, and it can be removed.

- If security mode was not disabled temporarily, the drum goes to the security mode position and cannot be removed, even if there is no master on the drum.

When security mode is disabled temporarily during printing, the master eject box will be locked when security mode is enabled again. If the machine stops during the job, the drum goes to home position and it can be removed.

- If security mode was not disabled temporarily and the machine stops during a job, the drum goes to the security mode position and cannot be removed.

6.12.4 MACHINE OPERATION IN SECURITY MODE

These two settings control machine operation.

- The user tool (System Settings – Administrator Tools – Security Option)
- The Security button on the right side of the display panel.

This table shows what the machine does for each set of settings.

	User Tool Setting: Normal	User Tool Setting: Higher
Security Button: Not pressed	Additional prints are possible The drum can be removed The master eject box can be removed	Not applicable: Security button always enabled if 'Higher' is selected.
Security Button: Pressed	Additional prints are not possible (the administrator also cannot do this) The drum cannot be removed (the administrator also cannot do this) The master eject box can be removed Note: The security button goes off at the end of the job, and the above security features are disabled. So, to keep your master secure at the end of the job, press the Security button again at the end of the job.	Additional prints are not possible (the administrator also cannot do this) The drum cannot be removed (the administrator also cannot do this) The master eject box cannot be removed, except by the administrator

6.13 AUTO OFF MODE

To meet environmental concerns, this machine has energy saving mode and auto off mode.

- Energy saver mode: The machine goes into a low-power mode
- Auto off mode: The main switch will be turned off automatically by a solenoid.

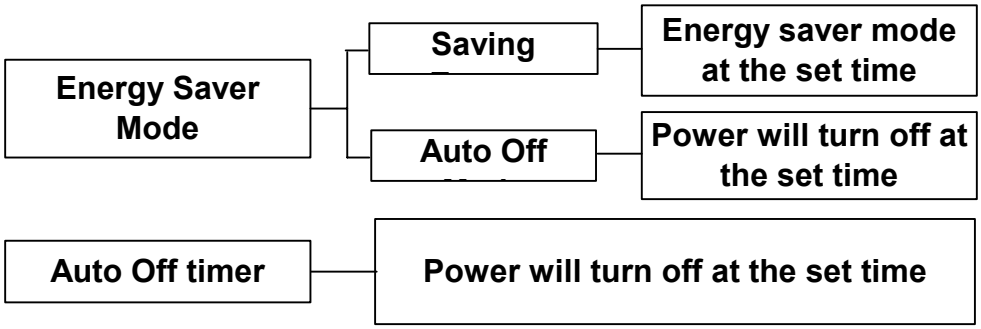

The mode that is used is set with a user tool (System Settings – Mode Setting – Energy Saver Option).

The machine goes into the selected mode at a set time after the end of a job, if the machine is not used. This time is set with a user tool (System Settings – Timer Settings – Energy Saver Timer).

There is also a 'timed auto-off mode'. In this mode, the machine will automatically go to auto off mode at a set time every day. The time is set with a user tool (System Settings – Timer Settings – Auto Off Timer). You use the same user tool to enable or disable this feature.

Specifications

While the online LED lights or blinks, the auto off mode does not turn on. But, if the auto off timer is set, the main switch will turn off at the set time.

The auto off timer does not turn the machine off if the machine power is turned on within 5 minutes before the auto off time.

The auto off timer does not turn the machine off if the machine is being used when the auto off time comes. The timer will not turn the machine off until the auto off time on the next day.

6.14 ERROR DETECTION

6.14.1 PAPER FEED ERROR DETECTION (A JAM)

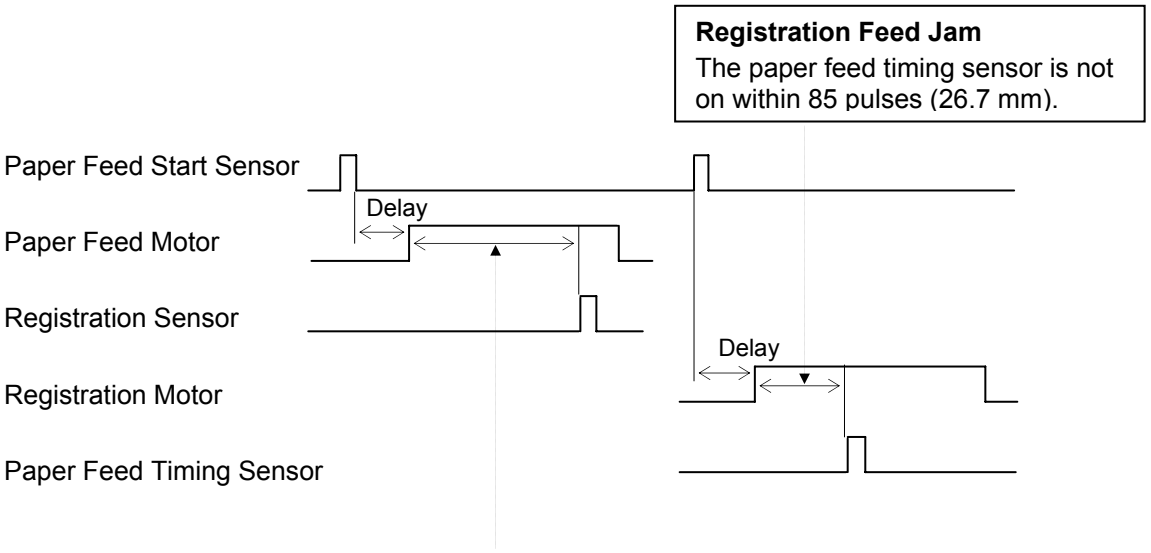

Paper Feed Jam

1) The registration sensor is not on at these times:
   Normal paper: within 308 pulses (96.8 mm) + Retry 308 pulses.
   Thick paper: 319 pulses (100.2 mm) + Retry 319 pulses.
2) When the paper feed motor starts, the paper feed start sensor is ON.

6.14.2 PAPER FEED ERROR DETECTION (A, B JAM)

The machine detects an error if one of these occurs:

- The paper registration sensor and paper feed timing sensor are both on immediately after the main switch is turned on.
- During printing, paper upper wrapping is detected (see section 6.14.3), but after the drum stops, the paper feed timing sensor is also on.

6.14.3 PAPER DELIVERY ERROR DETECTION

Paper Delivery Error

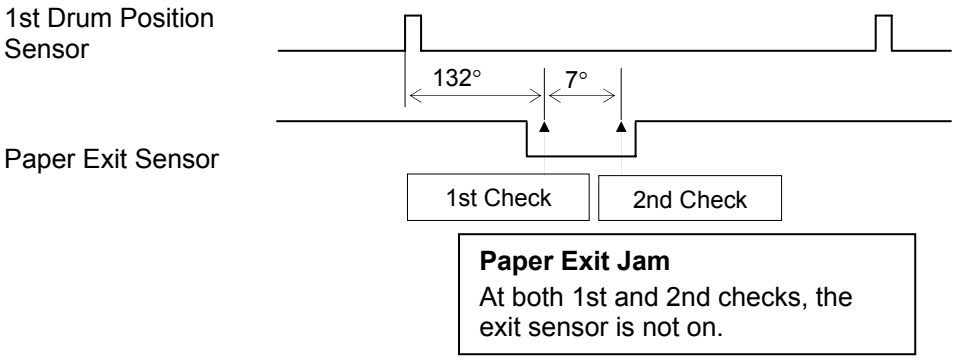

Paper Upper/Lower Wrapping Detection

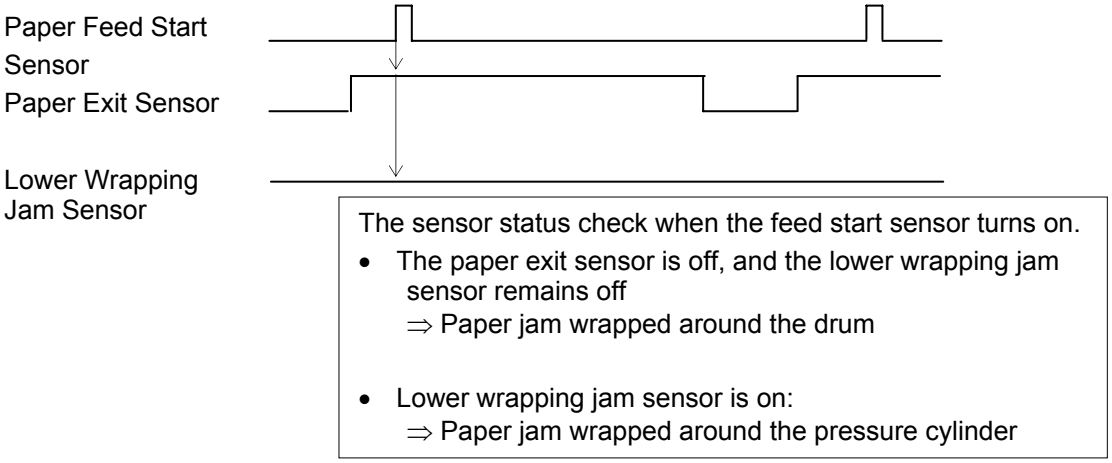

6.14.4 JAM INDICATION WHEN YOU TURN ON THE POWER

Paper Registration	Paper Feed Timing	Paper Exit	Lower Wrapping	Jam	Display
ON	OFF	-	-	Paper misfeed	A
OFF	ON	-	-	Paper upper wrapping misfeed	B
ON	ON	-	-	Paper feed timing misfeed	A, B
-	-	ON	-	Paper exit misfeed	C
-	-	-	ON	Paper lower wrapping misfeed	B

6.14.5 JAM INDICATION DURING PRINTING

Check if sensors do not turn on

Paper Registration	Paper Feed Timing	Paper Exit	Lower Wrapping	Jam	Display
Not ON	-	-	-	Paper misfeed	A
-	Not ON	-	-	Paper registration misfeed	A
-	OFF	Not ON	OFF	Paper upper wrapping misfeed	B
-	OFF	Not ON	ON	Paper lower wrapping misfeed	B
-	-	Not OFF	-	Paper exit misfeed	C

6.14.6 JAM DISPLAY WHEN THE DRUM STOPS AT HOME POSITION BECAUSE OF PAPER UPPER WRAPPING

Paper Registration	Paper Feed Timing	Paper Exit	Lower Wrapping	Jam	Display
-	ON	Not ON	-	Paper feed timing misfeed	A, B

-: ON or OFF

ON: Paper is detected by the sensor
OFF: Paper is not detected by the sensor
Not ON: Paper should be detected by the sensor, but it is not
Not OFF: Paper should not be detected by the sensor, but it is

6.14.7 MASTER EJECT ERROR DETECTION

Error of Master Pick-up from Drum

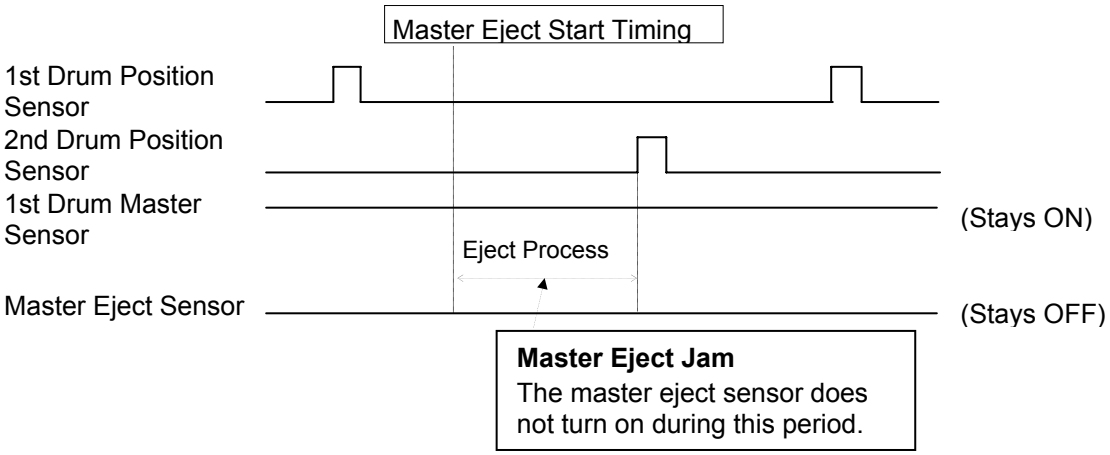

Master Eject and Compression Error

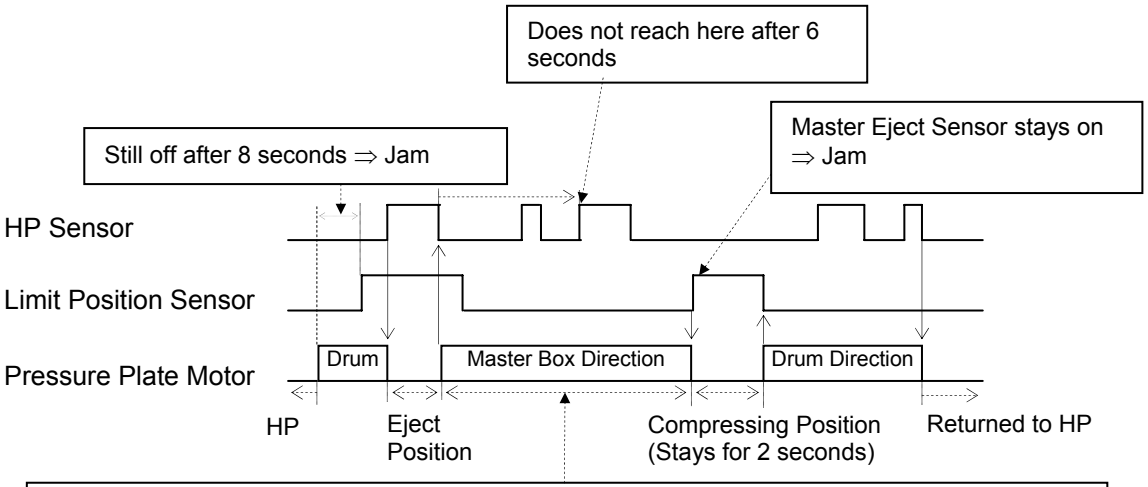

Check during rotation in the master box direction →

Number of HP Sensor On or Off Edges
(First on edge is just after motor starts.)

- 5 times ⇒ Normal
- 4 times ⇒ Master box full
- Less than 4 ⇒ Pressure plate locked (SC400 lights)

- Check Timing -
When one of the following occurs:

- When Limit Position Sensor turns on.
- 4.5 seconds passes after motor turns on (A3 master)
  3.5 seconds passes after motor turns on (A4 master)

6.14.8 ERROR DETECTION DURING MASTER MAKING

Master Set and Feed Error

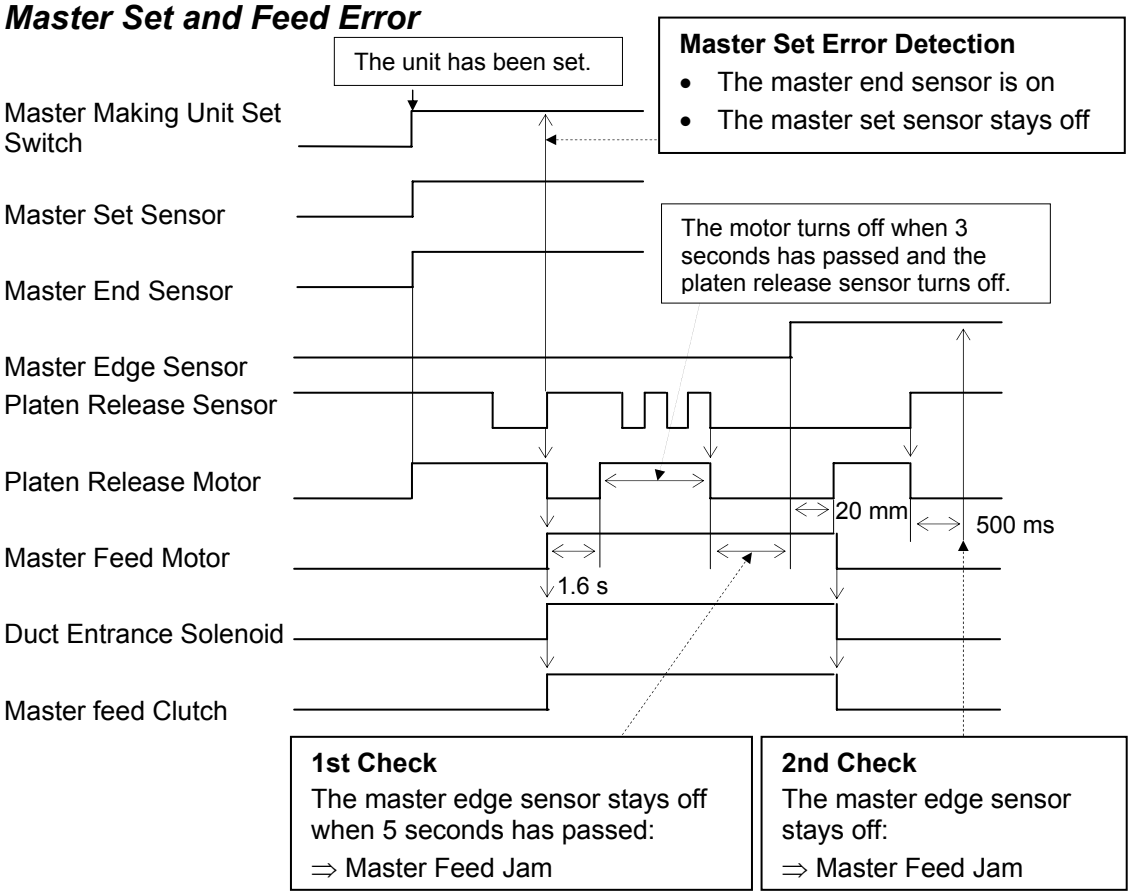

Master Cut Error

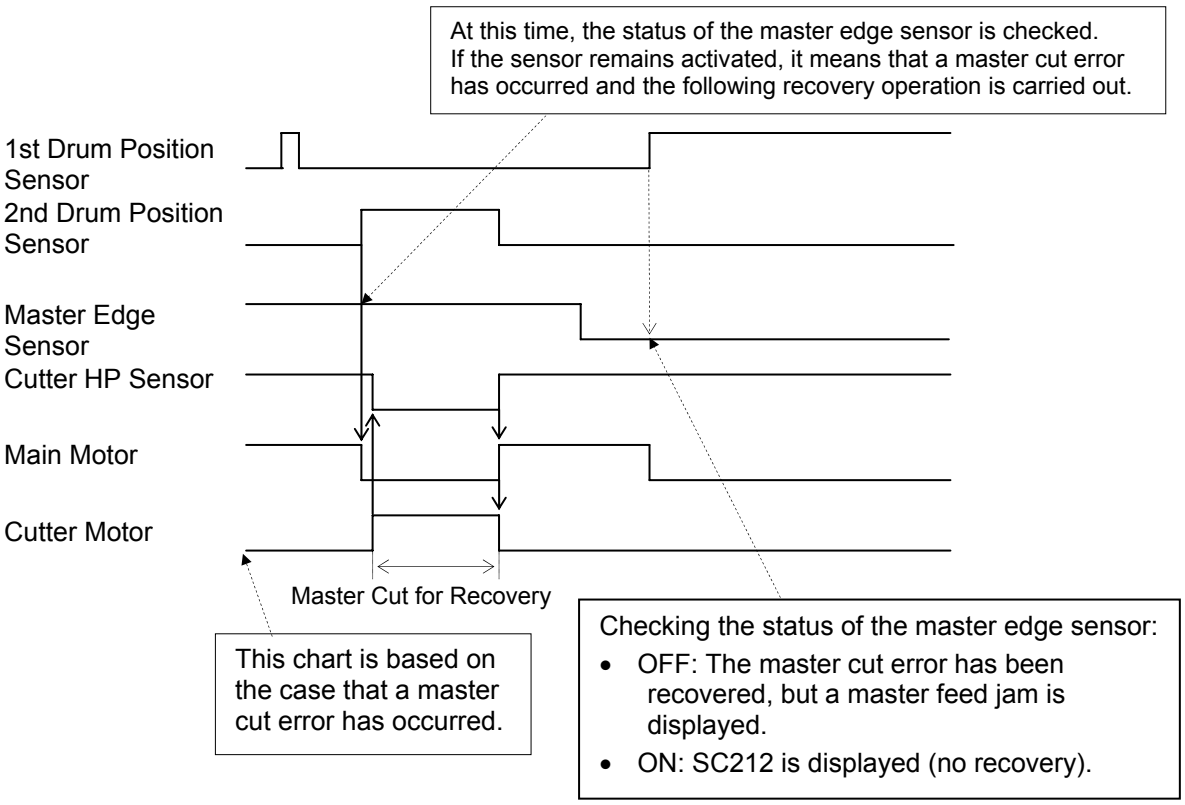

Error During Clamping the Master to the Drum

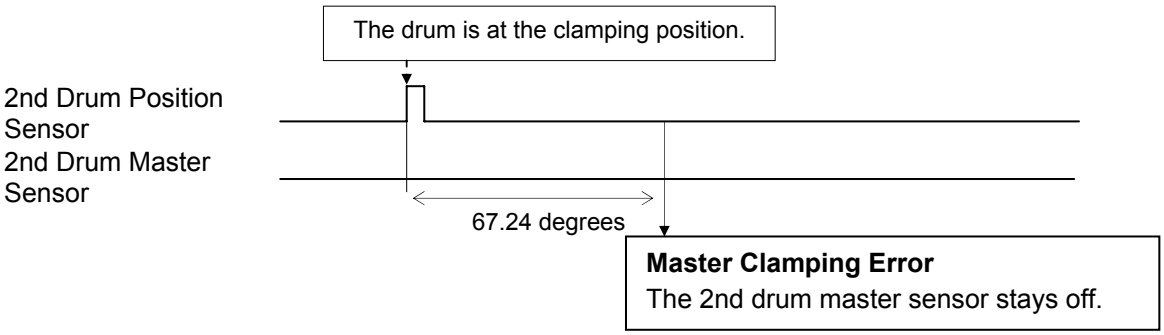

6.14.9 ORIGINAL FEED ERROR DETECTION IN THE ADF

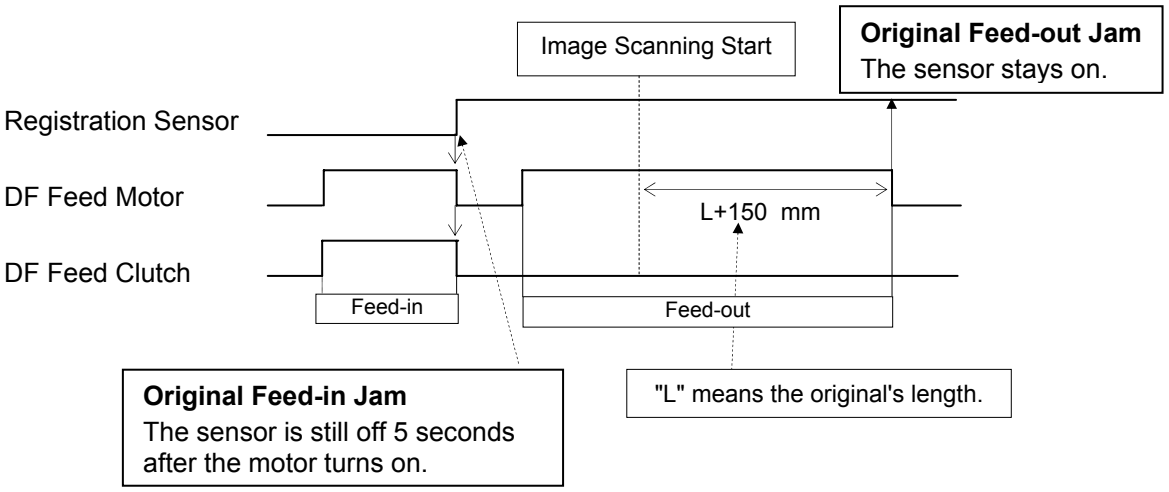

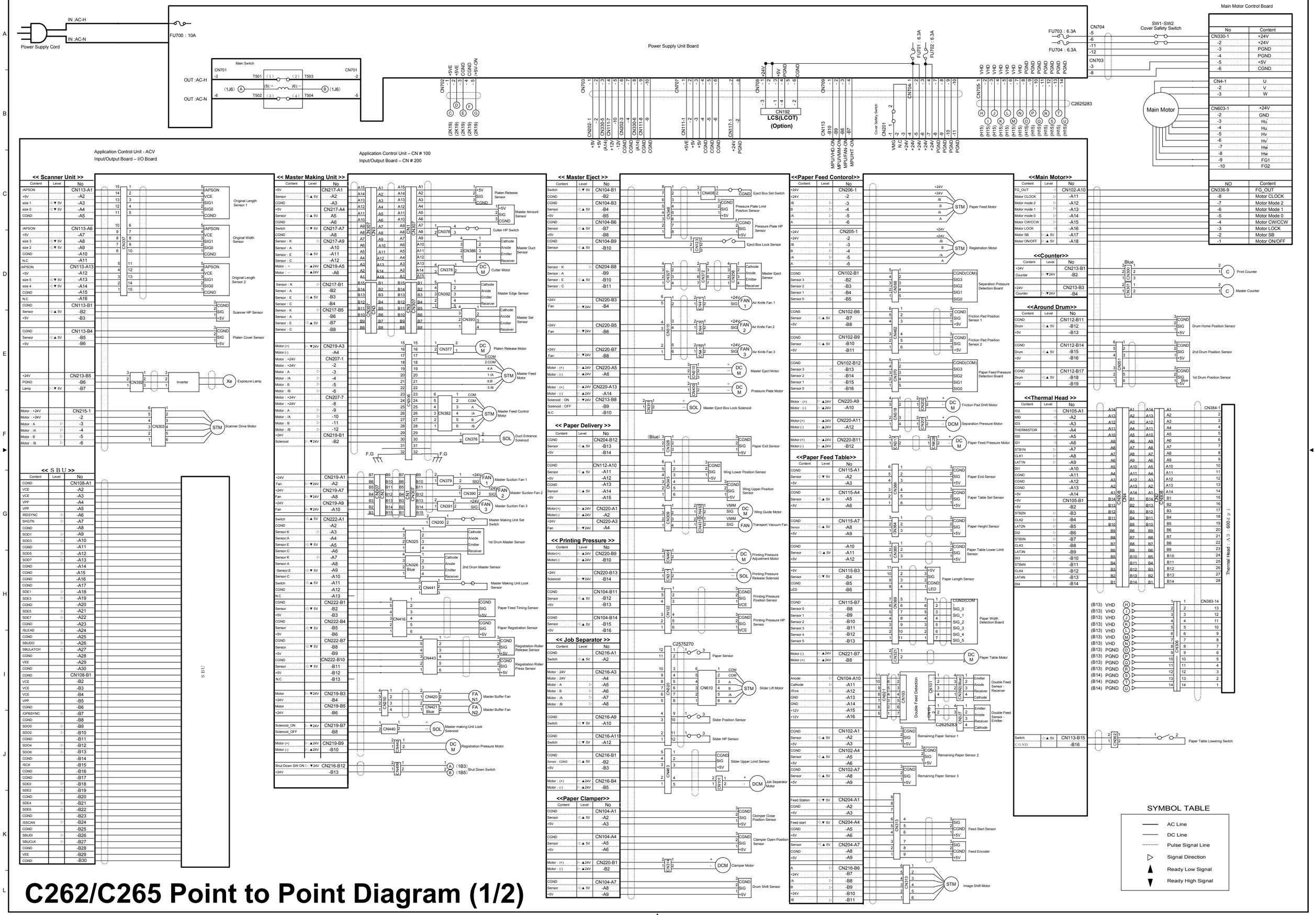

C262/C265 Point to Point Diagram (1/2)

C262/C265 Point to Point Diagram (2/2)

Main Processing Unit
I／O Board

<<Body>>

Content	Level	No
Sensor : K	▷	CN204-B4
Sensor : A		-B5
Sensor : E	◁:▲ 5V	-B6
Sensor : C		-B7
CGND		CN112-A1
A3(A4(A4)	◁:▲ 5V	-A2
+5V		-A3
CGND		CN112-A4
A3(A4(A3)	◁:▲ 5V	-A5
+5V		-A6
+5V		CN112-A7
Sensor	◁:▲ 5V	-A8
CGND		-A9
Motor (+)	▷ ▲24V	CN220-A7
Motor (-)	▷ ▲24V	-A8

Master End Sensor (Cathode, Anode, Emitter, Receiver) — CN432
A4 Cam Sensor (Blue) — CN432
A3 Cam Sensor — CN432
Lower Wrapping Jam Sensor — CN437
Pressure Cam Shift Motor — CN441, DCM

<<Drum>>

Content	Level	No
Ink Pump Sensor	◁	CN112-B1
Drum Size 0	◁	-B2
Drum Size 1	◁	-B3
Idling Roller HP SN	◁	-B4
Ink Detection	◁	-B5
Drum Shift HP SN	◁	-B6
Ink Cartridge Set SW	◁	-B7
Drum Shift-Pulse	◁	-B8
Thermostat-Ink Temp	◁	-B9
CGND		-B10
+5V		CN221-A1
Ink Pump Motor(+)	▷	-A2
Idling Roller Motor(-)	▷	-A3
Idling Roller Motor(+)	▷	-A4
Drum shift Motor(+)	▷	-A5
Drum shift Motor(-)	▷	-A6
Ink Pump Motor(-)	▷	-A7
OEM1	◁	-A8
OEM2	◁	-A9
CGND		-A10
-12V		-A11
N.C		-A12
Ink Flow Sensor	◁	CN113-B11
Drum ID 0	◁	-B12
Drum ID 1	◁	-B13
Ink Detection-Pulse	◁	-B14
Drum LED Red		CN204-B1
Drum LED Green		-B2
+5V		-B3

Ink Detection Board
CN901 CN902 — CN652, CN653, CN654, CN655, CN656, CN657, CN658, CN659, CN660, CN661, CN662, CN663, CN664, CN665, CN666, CN667, CN668, CN669, CN670, CN671, CN672, CN673, CN674, CN675, CN676, CN677, CN678, CN679, CN680, CN681, CN682, CN683, CN684, CN685, CN686, CN687, CN688, CN689, CN690, CN691,